NOTICE OF REGULAR MEETING

OF THE

CHICKASHA CITY COUNCIL

In compliance with Title 25, Oklahoma Statutes, Section 301-314, the Oklahoma Open Meeting Act, including the posting of notice and agenda, be advised that the Chickasha City Council, Chickasha Municipal Authority, and Chickasha Municipal Airport Authority of the City of Chickasha, Oklahoma, will conduct a **REGULAR MEETING ON MONDAY, DECEMBER 5, 2022, AT 6:30 PM**. Said meeting will be held in the Council Chambers, City Hall, 117 North 4th Street, Chickasha, Oklahoma.

The City of Chickasha encourages participation from all its citizens. If participation is not possible due to a disability, notification to the City Clerk at least 48 hours prior to the scheduled meeting is encouraged to make the necessary accommodations. The City may waive the 48-hour rule if signing is not the necessary accommodation.

All items on this agenda, including but not limited to any agenda item concerning the adoption of any ordinance, resolution, contract, agreement, or any other item of business, are subject to amendment, including additions and/or deletions. This rule will apply to every individual agenda item without exception, and without providing this same amendment language with respect to each individual agenda item. Such amendments should be rationally related to the topic of the agenda item, or the governing body will be advised to continue the item.

The governing body may adopt, approve, ratify, deny, defer, recommend, amend, strike, or continue any agenda item. When more information is needed to act on an item, the governing body may refer the matter to its City/Trust Manager, staff, attorney or to the recommending board, commission or committee.

Agenda items are attached.

I, Susan M. McDaniel, City Clerk, posted this Agenda on the official City of Chickasha bulletin board in the Municipal Building, 117 North 4th Street Chickasha, OK, 73018, which is accessible to the public twenty-four hours each day at 4:30 p.m. on Friday, December 2, 2022.

Susan M. McDaniel, CMC

Sworn to and subscribed before me on this 2nd day of December 2022.

My Commission Expires:10-1-2026

Notary Public, State of Oklahoma

CHICKASHA CITY COUNCIL

AGENDA
LOCATION OF MEETING
CITY HALL COUNCIL CHAMBERS
117 NORTH FOURTH STREET
CHICKASHA, OKLAHOMA 73018

TIME OF MEETING **DATE OF MEETING**
6:30 PM **DECEMBER 5, 2022**

All items on this agenda, including but not limited to any agenda item concerning the adoption of any ordinance, resolution, contract, agreement, or any other item of business, are subject to amendment, including additions and/or deletions. This rule will apply to every individual agenda item without exception, and without providing this same amendment language with respect to each individual agenda item. Such amendments should be rationally related to the topic of the agenda item, or the governing body will be advised to continue the item.

The governing body may adopt, approve, ratify, deny, defer, recommend, amend, strike, or continue any agenda item. When more information is needed to act on an item, the governing body may refer the matter to its City/Trust Manager, staff, attorney or to the recommending board, commission or committee.

1. Call to Order / Roll Call / Opening Prayer / Pledge of Allegiance.

2. Citizen Comments.

3. Council Communications.

a. Presentation on economic development proposal by Hitt Corporation.

4. Consent Docket:

a. Acceptance of the Mnutes of the November 21, 2022 regular meeting.
b. Acceptance of the Claims List.

c. Acceptance of Resolution 2022-27R amending the FY 22/23 Budget.

5. Discussion/Approval of Items Removed from Consent Docket:

6. Discussion and Consideration

a. Discussion, consideration, and possible action to approve the yearly renewal maintenance contract with Motorola for the CAD, Mapping and RMS database in an amount not to exceed $33,516.60.

b. Discussion, consideration, and possible action to approve the Law Enforcement Support Office (LESO) renewal and addendum.

c. Public Hearing - to discuss and consider the Use on Review for 602 S 22nd Street for Applicant Micah McCarty

d. Discussion, consideration, and possible action to approve Ordinance 2022-27 - Use on Review Permit for 602 22nd Street for applicant Micah McCarty

e. Discussion, consideration, and possible action to authorize the purchase of a Petersen TL-3 Lightning Loader and a Freightliner Chassis for an amount not to exceed $233,895.13 on State Contract SW035T.

f. Discussion, consideration, and possible action to approve Resolution 2022-26R and authorize the Mayor to issue the Election Proclamation - A Resolution of the Mayor and Council of the City of Chickasha, Grady County, State of Oklahoma, calling for a Non-Partisan Regular Election for the purposes of electing officers of the City of Chickasha, setting a date for said election, setting the filing period for the purpose of allowing qualified candidates to file a declaration of candidacy, setting forth the qualifications for office, setting a final presentment date to the county election board, and setting a final date for publication.

g. Discussion, consideration, and possible action to waive the competitive quote process and authorize the purchase of a new 2022 Ford Explorer SUV for the Community Development Code Enforcement Officer under State Contract SW0035 from Vance Country Ford in an amount not to exceed $35,390.20

h. Discussion, consideration, and possible action to approve an agreement with WANRack LLC for the use of public right-of-ways to provide telecommunications services for Chickasha Independent School District.

i. Discussion, consideration, and possible action to accept COC-2201 - Shannon Springs Park Electrical Expansion Project as complete and authorize the final payment in the amount off $5,112.95 to ETI.

7. Executive Session:

a. Discussion, consideration, and possible action to enter into an executive session to discuss confidential communications between the City and City's Attorneys concerning a pending investigation, claim or action which the City with the advice of the City's Attorneys, has determined that disclosure will seriously impair the ability of the City to process the claim or conduct the pending investigation, litigation, or proceeding in the public interest in compliance with its duty of confidentiality under the provisions of 25 O.S. §307B(4). (Email submitted by Torry Wise dated October 22, 2022, regarding the Chickasha Economic Development Council and the economic development incentive program (Downtown Grant Program), including discussion of process going forward on areas of concern and the Chickasha Economic Development Council's position regarding the Oklahoma Open Meeting Act and the Oklahoma Open Record Act in conjunction with the Chickasha Economic Development Council's receipt of Hotel/Motel taxes).

b. Discussion, consideration, and possible action to reconvene open session and take appropriate action on any matter discussed in Executive Session.

8. Motion to Adjourn.

City of
CHICKASHA

Meeting Type: Council Agenda 12-5-2022

Meeting Date: 12/5/2022

Department: City Clerk **Agenda Item No. 3.a.**

AGENDA ITEM: Presentation on economic development proposal by Hitt Corporation.

I. BACKGROUND/DESCRIPTION:

II. RECOMMENDED ACTION:

III. FISCAL INFORMATION -

IV. FUND INFORMATION:

Dept. Director:	Fund	Account	Amount
	(To)		
	FUND	ACCOUNT	AMOUNT
Meeting Date: December 5, 2022	(From)		

V. ATTACHMENTS:

City of
CHICKASHA

Meeting Type: Council Agenda 12-5-2022

Meeting Date: 12/5/2022

Department: City Clerk **Agenda Item No. 4.a.**

AGENDA ITEM: Acceptance of the Mnutes of the November 21, 2022 regular meeting.

I. BACKGROUND/DESCRIPTION:

II. RECOMMENDED ACTION:
Accept of the Mnutes of the November 21, 2022 regular meeting.

III. FISCAL INFORMATION -

IV. FUND INFORMATION:

Dept. Director: Susan M. McDaniel, CMC - City Clerk	Fund	Account	Amount
	(To)		
	FUND	ACCOUNT	AMOUNT
Meeting Date: November 21, 2022	(From)		

V. ATTACHMENTS:
1. City 11-21-2022

November 21, 2022

The **REGULAR** meeting of the **CHICKASHA CITY COUNCIL** was held in the council chambers in city hall on the 21st day of November 2022 as specified by advance public notice with a properly prepared agenda stating the subject matter or matters to be discussed at said meeting. Mayor Mosley called the meeting to order at 6:30 p.m.

ITEM 1. Call to Order / Roll Call / Opening Prayer / Pledge of Allegiance

MAYOR AND COUNCIL

PRESENT: Chris Mosley, Mayor
Zachary Grayson, Vice-Mayor
Kea Ginn
Oscar Nelson
Georgianne Hebblethwaite
Brian Gerdes
Nate McCalla

ABSENT: Kelly Boyd
R. P. Ashanti-Alexander

STAFF

PRESENT: Keith Johnson, City Manager
Cindy Rogers, Asst. City Manager
Amanda Mullins, City Attorney
Susan McDaniel, City Clerk
Tony Samaniego, Fire Chief
Jason Myrko, Police Dept.
Jim Crosby, Public Works Director
Rachel Bernish, Community Development Director
Shae Mortimer, Marketing & Civic Engagement Manager

ITEM 1. Call to Order/Roll Call/Opening Prayer/Pledge of Allegiance:

Council Member Nelson gave the invocation and Council Member Ginn lead the Pledge of Allegiance.

ITEM 2. Citizen Comments:

(City Council Rules and Regulations limit visitor comments to a maximum of three minutes.)

Garrett Hall, Chickasha – spoke regarding the Use On Review being presented to Council for consideration – Item 6 d

Laurie Allen, Chickasha – spoke regarding records she requested from the Economic Development Council.

ITEM 3. Council Communications.

Mayor Mosley welcomed the Boy Scout Troup #4306.

City Manager, Keith Johnson, commented that the temporary placement of the lampshade. The permission has been rescinded and the lampshade has been removed.

ITEM 4. Consent Docket: ITEM 4a through ITEM 4c.

ITEM 4a. Acceptance of the Minutes of the November 7, 2022, regular meeting.
ITEM 4b. Acceptance of the DEQ Permits for The Woodlands Sanitary Sewer and Water line permits.
ITEM 4c. Acceptance of Resolution 2022-25R amending FY 22/23 Budget.

*Motion by Council Member Grayson, second by Council Member Nelson to approve the Consent Docket: ITEM 4a thru ITEM 4c.

Roll call vote:

Ayes:"	Nelson, Ginn, Hebblethwaite, Grayson, McCalla, Gerdes and Mosley.
"Nays:"	None
"Abstain:"	None.
Motion carried.	7-0

ITEM 5. Discussion/Approval of Items Removed from Consent Docket:

No Action Taken.

ITEM 6. Discussion and Consideration Items:

ITEM6a. Discussion, consideration, and possible action to surplus a 2009 Ford F-450 ambulance and authorize it to be used as trade in value for the new ambulance.

*Motion by Council Member Hebblethwaite and second by Council Member Grayson to surplus the 2009 ambulance to be used as trade in value for the new ambulance that was recently approved to purchase on the November 7, 2022 Agenda.

Roll call vote:

"Ayes:"	Nelson, Ginn, Hebblethwaite, Grayson, McCalla, Gerdes, and Mosley.
"Nays:"	None.
"Abstain:"	None.
Motion passed.	7-0

ITEM 6b. Discussion, consideration, and possible action to change the surplus of a 2015 Ram 4500 ambulance from sell at consignment and authorize it to be used as a trade-in on the new ambulance.

*Motion by Council Member Hebblethwaite and second by Council Member Nelson to use the truck as a trade in value rather than selling at consignment.

Roll call vote:

"Ayes:"	Ginn, Hebblethwaite, Grayson, McCalla, Gerdes, Nelson, and Mosley.
"Nays:"	None.
"Abstain:"	None.
Motion passed.	7-0

ITEM 6c. Public Hearing – to discuss and consider the request for a Use-On-Review Permit to allow a Tattoo Parlor at 421 W. Chickasha Avenue for Applicant Garrett Hall.

Public Hearing opened at 6:40 p.m.

No one appeared to speak.

Public Hearing closed at 6:41 p.m.

ITEM 6d. Discussion, consideration, and possible action to approve Ordinance 2022-26 – Use-On-Review permit request for a Tattoo Parlor at 421 W. Chickasha Avenue for applicant Garrett Hall.

*Motion by Council Member Nelson and second by Council Member Hebblethwaite to approve Ordinance 2022-26 as presented.

Roll call vote:

"Ayes:"	Grayson, Ginn, Hebblethwaite, McCalla, Gerdes, Nelson, and Mosley.
"Nays:"	None.
"Abstain:"	None.
Motion passed.	7-0

ITEM 6e. **Discussion, consideration, and possible action to approve an amended Economic Incentive Agreement for Moonlight Ownership Company in an amount not to exceed $37,415.30 and authorize the Mayor to execute the same.**

*Motion by Council Member Gerdes and second by Council Member Grayson to approve an amended Economic Incentive Agreement for Moonlight Ownership Company in an amount not to exceed $37,415.30.

Roll call vote:

"Ayes:"	McCalla, Gerdes, Ginn, Nelson, Hebblethwaite, Grayson, and Mosley.
"Nays:"	None.
"Abstain:"	None.
Motion passed	7-0

ITEM 6f. **Discussion, consideration, and possible action to approve the third Application and Certification for Payment in the amount of $47,562.70 to ETI on the Shannon Springs Park Electrical Expansion project.**

*Motion by Council Member McCalla and second by Council Member Gerdes to approve the Application and Certification for Payment in the amount of $47,56.70 to ETI on the Shannon Springs Park Electrical Expansion project.

Roll call vote:

"Ayes:"	McCalla, Gerdes, Nelson, Ginn, Hebblethwaite, Grayson, and Mosley.
"Nays:"	None.
"Abstain:"	None.
Motion passed.	7-0

ITEM 6g. **Discussion, consideration, and possible action to enter into a Lease Agreement with WCA of Oklahoma, LLC to lease the 10 acres south of Public Works to be used for storage of limbs until they can be disposed of properly.**

*Motion by Council Member Hebblethwaite and second by Council Member Grayson to enter into a Lease Agreement with WCA of Oklahoma, LLC to lease the 10 acres south of Public Works to be used for storage of limbs until they can be disposed of properly.

Roll call vote:

"Ayes:"	Grayson, Ginn, Hebblethwaite, McCalla, Gerdes, Nelson and Mosley.
"Nays:"	None.
"Abstain:"	None.
Motion passed.	7-0

ITEM 6h. **Discussion, consideration, and possible action to adopt Resolution 2022-24R – A Resolution of Project Sponsorship for a Transportation Alternatives Program Application and Maintenance Commitment.**

*Motion by Council Member Nelson and second by Council Member Ginn to adopt Resolution 2022-24R – A Resolution of Project Sponsorship for a Transportation Alternatives Program Application and Maintenance Commitment.

Roll call vote:

"Ayes:"	Grayson, Ginn, Hebblethwaite, McCalla, Gerdes, Nelson and Mosley.
"Nays:"	None.
"Abstain:"	None.
Motion passed.	7-0

ITEM 6i. **Discussion, consideration, and possible action to waive the competitive quote process and authorize the purchase of a new 222 Ford F-150 4WD Crew Cab Truck for the Parks and Recreation Department under State Contract SW0035 from Vance Country Ford in an amount not to exceed $38,387.00.**

*Motion by Council Member Hebblethwaite and second by Council Member Gerdes to waive the competitive quote process and authorize the purchase of a new 222 Ford F-150 4WD Crew Cab Truck for the Parks and Recreation Department under State Contract SW0035 from Vance Country Ford in an amount not to exceed $38,387.00.

Roll call vote:

"Ayes:"	Grayson, Ginn, Hebblethwaite, McCalla, Gerdes, Nelson and Mosley.
"Nays:"	None.
"Abstain:"	None.
Motion passed.	7-0

ITEM 6j. **Discussion, consideration, and possible action to enter into an agreement with HALFF Associates, Inc. to provide grant writing services to apply for funding improvements to Shannon Springs Park in the amount of $6,500.**

*Motion by Council Member McCalla and second by Council Member Hebblethwaite to enter into an agreement with HALFF Associates, Inc. to provide grant writing services to apply for funding improvements to Shannon Springs Park in the amount of $6,500.

Roll call vote:

"Ayes:"	Grayson, Ginn, Hebblethwaite, McCalla, Gerdes, Nelson, and Mosley.
"Nays:"	None.
"Abstain:"	None.
Motion passed.	7-0

ITEM 7. **Adjournment:**

Motion by Council Member Grayson and second by Council Member Hebblethwaite to adjourn the meeting.

Meeting adjourned.

TIME: 6:53 P.M.

_____
Chris Mosley, Mayor

ATTEST:

_____
Susan M. McDaniel, CMC - City Clerk

Approved this 5th day of December 2022.

City of
CHICKASHA

Meeting Type: Council Agenda 12-5-2022

Meeting Date: 12/5/2022

Department: Finance **Agenda Item No. 4.b.**

AGENDA ITEM: Acceptance of the Claims List.

I. BACKGROUND/DESCRIPTION:

II. RECOMMENDED ACTION:
Accept the Claims List.

III. FISCAL INFORMATION -

IV. FUND INFORMATION:

Dept. Director:	Fund	Account	Amount
	(To)		
	FUND	ACCOUNT	AMOUNT
Meeting Date: December 5, 2022	(From)		

V. ATTACHMENTS:
1. 12.5.22 COUNCIL REPORT_Redacted

DEPARTMENT	FUND	VENDOR NAME	DESCRIPTION	AMOUNT
NON-DEPARTMENTAL	GENERAL FUND	BLUE CROSS BLUE SHIELD OF OKLAHOMA 202	BLUE CROSS BLUE SHIELD OF	1,937.05-
			BLUE CROSS BLUE SHIELD OF	1,937.05
			BLUE CROSS BLUE SHIELD OF	1,937.05
		DEARBORN NATIONAL	DEARBORN NATIONAL	195.77-
			DEARBORN NATIONAL	195.77
			DEARBORN NATIONAL	195.77
			TOTAL:	2,132.82
ADMINISTRATION	GENERAL FUND	SUSAN MCDANIEL	MILEAGE REIMBURSEMENT	102.92
		EXPRESS STAR	HR PUBLICATIONS	81.70
		OMCTFOA	2023 MEMBERSHIP DUES	50.00
		AT&T MOBILITY	ADMIN 1664	297.45
		BLUE CROSS BLUE SHIELD OF OKLAHOMA 202	DENTAL EMP/SPOOUSE	50.90
			MED $1,000 DED EMP/SPOUSE	999.90
		OKLAHOMA MUNICIPAL RETIRE	OMRF	632.98
		OMAG WORKERS'COMPENSATION	ADMIN	1,600.00
		TRANSFER ACCOUNT	FICA	863.14
			FICA	862.89
			MEDICARE	201.87
			MEDICARE	201.81
			TOTAL:	5,945.56
FIRE ADMINISTRATION	GENERAL FUND	MISC ONE-TIME V K&M SAFETY SOLUTIONS L	FIRE EXTINGUISHER	1,087.00
		ALLEN PEST CONTROL	SPRAY STATION 1	225.00
		VERIZON WIRELESS	FIRE ADMIN	240.06
		AT&T MOBILITY	FIRE ADMIN 1664	85.98
			FIRE ADMIN 4564	2,302.71
		PUBLIC SERVICE COMPANY OF OKLAHOMA	FIRE ADMIN	24.09
		BLUE CROSS BLUE SHIELD OF OKLAHOMA 202	DENTAL EMP ONLY	12.66
			DENTAL EMP/FAMILY	97.34
			MED $1,000 DED EMP ONLY	60.12
			MED $1,000 DED EMP/FAM	1,375.18
		OTA PIKEPASS	FIRE ADMIN	22.80
			FIRE ADMIN	22.62
			FIRE ADMIN	16.55
		OKLAHOMA MUNICIPAL RETIRE	OMRF	82.06
		OMAG WORKERS'COMPENSATION	FIRE ADMIN	1,743.75
		TRANSFER ACCOUNT	FICA	65.67
			FICA	67.62
			MEDICARE	109.20
			MEDICARE	109.65
			TOTAL:	7,750.06
POLICE ADMINISTRATION	GENERAL FUND	MISC ONE-TIME V K&M SAFETY SOLUTIONS L	FIRE EXTINGUISHER	756.50
		GRADY COUNTY LAW ENFORCEMENT CENTER	MONTHLY BILL	100.00
		SPIC & SPAN COMMERCIAL CLEANING, LLC	CLEANING SERVICE	1,082.00
		BLUE CROSS BLUE SHIELD OF OKLAHOMA 202	DENTAL EMP/CHILD	71.64
			DENTAL EMP ONLY	25.32
			DENTAL EMP/SPOOUSE	25.45
			MED $1,000 DED EMP ONLY	335.44
			MED #2,500 DED EMP/SPOUSE	405.72
		CKENERGY ELECTRIC COOPERATIV	POLICE ADMIN ELECTRIC	143.53
		OTA PIKEPASS	POLICE ADMIN	9.30
			POLICE ADMIN	3.10
		CITY OF CHICKASHA-(ACH) OKLAHOMA POLIC	POLICE PENSION	500.00
			POLICE PENSION	500.00

DEPARTMENT	FUND	VENDOR NAME	DESCRIPTION	AMOUNT
		OKLAHOMA MUNICIPAL RETIRE	OMRF	472.99
		SUMMIT UTILITIES	POLICE ADMIN	47.74
		OMAG WORKERS'COMPENSATION	POLICE ADMIN	3,564.50
		TRANSFER ACCOUNT	FICA	630.23
			FICA	630.58
			MEDICARE	147.39
			MEDICARE	147.47
		UNIFIRST HOLDINGS, L.P.	POLICE	42.89
			POLICE	14.96
		ESRI INC.	RENEWAL	1,650.00
			TOTAL:	11,306.75
CEMETERY SERVICES	GENERAL FUND	AT&T MOBILITY	CEMETERY 1664	45.68
		BLUE CROSS BLUE SHIELD OF OKLAHOMA 202	DENTAL EMP ONLY	12.66
			MED $1,000 DED EMP ONLY	206.42
		OKLAHOMA MUNICIPAL RETIRE	OMRF	142.94
		OKLAHOMA ELECTRIC COOP	ACCT: 4705400700	55.34
		TRANSFER ACCOUNT	FICA	167.80
			FICA	117.82
			MEDICARE	39.24
			MEDICARE	27.56
		WYNN, JEFFREY	GRAVE OPENING & CLOSING	2,915.00
			TOTAL:	3,730.46
HUMAN RESOURCES	GENERAL FUND	OMAG WORKERS'COMPENSATION	HUMAN RESOURCES	29.00
		TRANSFER ACCOUNT	FICA	7.30
			MEDICARE	1.71
			TOTAL:	38.01
LIBRARY	GENERAL FUND	MISC ONE-TIME V K&M SAFETY SOLUTIONS L	FIRE EXTINGUISHER	145.00
		OVERDRIVE	ANNUAL MAINTENANCE FEE	1,000.00
			FUTURE CONTENT PURCHASES	2,000.00
		STANDLEY SYSTEMS	ELEVATE PHONE SOLUTION	2,355.75
		AT&T MOBILITY	LIBRARY 1664	91.36
		SPIC & SPAN COMMERCIAL CLEANING, LLC	CLEANING SERVICE	1,665.00
		BOOK SYSTEM	ATRIUUM, SNAPSHOT	2,905.00
		BLUE CROSS BLUE SHIELD OF OKLAHOMA 202	DENTAL EMP ONLY	50.64
			MED $1,000 DED EMP ONLY	412.84
			MED $2,500 DED EMP ONLY	335.04
		INFOUSA MARKETING INC	REFERENCE SOLUTIONS	1,300.00
		NYLA ALI KHAN	LET'S TALK ABOUT IT	211.60
		HARLAN HARBOUR WINN	LET'S TALK ABOUT IT	199.14
		OKLAHOMA MUNICIPAL RETIRE	OMRF	542.27
		A ALERT ALARM CO	ALARM SERVICE	38.00
		OMAG WORKERS'COMPENSATION	LIBRARY	174.00
		TRANSFER ACCOUNT	FICA	482.43
			FICA	469.94
			MEDICARE	112.83
			MEDICARE	109.91
		INGRAM BOOK SERVICE	SEPTEMBER BOOK ORDER	3,336.77
		CRANTON, BETH	ERRAND REIMBURSEMENT	47.88
			TOTAL:	17,985.40
STREET & STORM DRAINAG	GENERAL FUND	MISC ONE-TIME V K&M SAFETY SOLUTIONS L	FIRE EXTINGUISHER	1,194.00
		EXPRESS SERVICES INC	CONTRACT LABOR	4,074.45
			CONTRACT LABOR	596.11

DEPARTMENT	FUND	VENDOR NAME	DESCRIPTION	AMOUNT
			CONTRACT LABOR	550.30
			CONTRACT LABOR	2,638.18
			CONTACT LABOR	602.49
			CONTRACT LABOR	670.64
			CONTRACT LABOR	718.12
			CONTRACT LABOR	562.91
		MARSHALL AUTO PARTS	PARTS & SUPPLIES	816.61
			PARTS & SUPPLIES	157.82
		PUBLIC SERVICE COMPANY OF OKLAHOMA	STREETS & STORM	14.89
			STREET	10,688.89
		BLUE CROSS BLUE SHIELD OF OKLAHOMA 202	DENTAL EMP ONLY	50.64
			DENTAL EMP/FAMILY	48.67
			DENTAL EMP/SPOOUSE	25.45
			MED $1,000 DED EMP ONLY	206.42
			MED $1,000 DED EMP/FAM	129.02
			MED $1,000 DED EMP/SPOUSE	499.95
			MED $2,500 DED EMP ONLY	335.04
		HOLT TRUCK CENTERS OF OKLAHOMA LLC	TRUCK REPAIR	11,246.20
		OTA PIKEPASS	STREETS & STORM	1.55
			STREETS & STORM	46.20
		OKLAHOMA MUNICIPAL RETIRE	OMRF	723.33
		TRAFFIC SIGNALS INC	SERVICE CALLS, PARTS,REPA	300.00
			TRAFFIC SIGNALS INC	2,000.00
			TRAFFIC SIGNALS INC	450.00
		OMAG WORKERS'COMPENSATION	STREETS	10,127.75
		P & K EQUIPMENT	SKID PLATE, BRACKET ETC	724.11
			SKID PLATE,, BRACKET	732.14
		TRANSFER ACCOUNT	FICA	631.12
			FICA	599.78
			MEDICARE	147.60
			MEDICARE	140.27
		BARCO MUNICIPAL PRODUCTS	MISSING& FADED STREET SIG	17,666.82
		UNIFIRST HOLDINGS, L.P.	STREETS	1,116.92
			STREETS	99.03
		BARRINGTON ELECTRIC	STREET LIGHT REPAIR	2,352.00
		RUSH TRUCK CENTER	BRAKE VALVES	1,350.00
			TOTAL:	75,035.42
FLEET MAINTENANCE	GENERAL FUND	OMAG WORKERS'COMPENSATION	FLEET MAINT	511.00
			TOTAL:	511.00
ACCOUNTING SERVICES	GENERAL FUND	AT&T MOBILITY	ACCOUNTING 1664	91.36
		BLUE CROSS BLUE SHIELD OF OKLAHOMA 202	DENTAL EMP ONLY	37.98
			MED $1,000 DED EMP ONLY	412.84
			MED $2,500 DED EMP ONLY	167.52
		HSPG & ASSOCIATES, PC	AUDIT SERVICES	8,000.00
		OKLAHOMA MUNICIPAL RETIRE	OMRF	719.37
		CULLIGAN/WRIGHT WATER	COOLERS-WATER	21.00
		OMAG WORKERS'COMPENSATION	ACCOUNTING	116.00
		TRANSFER ACCOUNT	FICA	591.31
			FICA	626.99
			MEDICARE	138.29
			MEDICARE	146.64
			TOTAL:	11,069.30
COMM DEVEL/PLANNING SE	GENERAL FUND	EXPRESS STAR	PUBLIC NOTICE FEES	37.50

DEPARTMENT	FUND	VENDOR NAME	DESCRIPTION	AMOUNT
			PUBLIC NOTICE	25.80
		AT&T MOBILITY	COMM DEV 1664	217.12
		BLUE CROSS BLUE SHIELD OF OKLAHOMA 202	DENTAL EMP/CHILD	71.64
			DENTAL EMP ONLY	25.32
			MED $1,000 DED EMP ONLY	412.84
			MED $2,500 DED EMP/CHILD	303.21
		OTA PIKEPASS	COMM DEV	4.30
			COMM DEV	0.60
		OKLAHOMA MUNICIPAL RETIRE	OMRF	415.25
		OKLAHOMA MUNICIPAL LEAGUE	OML PLANNING WORKSHOP	95.00
		OMAG WORKERS'COMPENSATION	COMM DEV	58.00
		TRANSFER ACCOUNT	FICA	427.60
			FICA	367.26
			MEDICARE	100.00
			MEDICARE	85.89
			TOTAL:	2,647.33
GENERAL GOVERNMENT	GENERAL FUND	IRON MOUNTAIN INC.	MONTHLY SHREDDING SERVICE	100.43
			MONTHLY SHREDDING SERVICE	101.46
		CHAFFIN, MICHAEL R.	NOVEMBER '22 JUDICIAL CONT	1,800.00
		MISC ONE-TIME V K&M SAFETY SOLUTIONS L	FIRE EXTINGUISHER	390.00
		LYTLE SOULE' & FELTY	LEGAL FEES	181.50
		STANDLEY SYSTEMS	MONTHLY MAINTENANCE	9,635.76
			MONTHLY MAINTENANCE	59.99
		QUADIENT LEASING USA, INC	POSTAGE- INK	324.93
			POSTAGE- INK	226.00
		AMANDA MULLINS, PLLC	LEGAL MATTERS-OCT 2022	8,730.05
		ASCENTIS CORPORATION	SI-134522	1,457.50
		OSBI	HR BACKGROUND	19.00
		MARGARET MCMORROW-LOVE	GEN MATTERS-OCT 2022	2,491.90
			TOTAL:	25,518.52
BUILDING SERVICES	GENERAL FUND	BLUE CROSS BLUE SHIELD OF OKLAHOMA 202	DENTAL EMP/CHILD	71.64
			DENTAL EMP/FAMILY	48.67
			MED $1,000 DED EMP/CHILD	373.62
			MED $2,500 DED EMP/CHILD	303.21
		OKLAHOMA MUNICIPAL RETIRE	OMRF	351.24
		OMAG WORKERS'COMPENSATION	BUILDING	58.00
		TRANSFER ACCOUNT	FICA	290.48
			FICA	289.83
			MEDICARE	67.93
			MEDICARE	67.78
		OKLAHOMA UNIFORM BUILDING CODE COMMISS	STATE FEES FOR PERMITS	448.00
			TOTAL:	2,370.40
FIRE OPERATIONS	GENERAL FUND	MISC ONE-TIME V ELITE TRANSMISSIONS		4,434.03
		OSU-OKC FIRE PROTECTIO	(6) FIRE CLASS	300.00
		OKLAHOMA STATE UNIVERSITY	FIRE OFFICER II TRAI	1,529.00
		OMAG WORKERS'COMPENSATION	FIRE OPERATIONS	37,201.00
		TRANSFER ACCOUNT	MEDICARE	897.73
			MEDICARE	860.93
		EXPRESS TIRE BRAKE & ALIG	(4) TIRES FOR R1	1,256.00
		IAFF LOCAL 2041 (HEALTH INS)	FIR/EECH OPTION A	1,402.80
			FIRE EE/CHILD(REN) DENTAL	62.40
			FIRE EE DENTAL	48.00
			FIRE FAMILY DENTAL	365.20

DEPARTMENT	FUND	VENDOR NAME	DESCRIPTION	AMOUNT
			FIR/EE OPTION A	270.00
			FIR/EE OPTION B	248.40
			FIR/FAM OPTION A	8,544.00
			FIR/EE/CH VISION	33.60
			FIR/EE VISION	14.40
			FIR/FAM VISION	176.00
			TOTAL:	57,643.49
PATROL SERVICES	GENERAL FUND	AT&T	PATROL 125548331	93.50
		AT&T	PATROL SERV	1,211.15
			PATROL SERV	785.70
		BURKHART, ERIC	REIMBURSEMENT	135.14
		VERIZON WIRELESS	PATROL SERV	3,984.50
		ACCURATE SOLUTIONS INCORPORATED	PRE-EMPLOYMENT POLYGRAPH	300.00
		AT&T MOBILITY	PATROL SERV 1664	91.36
			PATROL SERV2 1664	137.04
			PATROL SERV	3,123.72
		BLUE CROSS BLUE SHIELD OF OKLAHOMA 202	DENTAL EMP/CHILD	214.92
			DENTAL EMP ONLY	25.32
			DENTAL EMP/FAMILY	292.02
			DENTAL EMP/SPOOUSE	25.45
			MED $1,000 DED EMP/CHILD	1,120.86
			MED $1,000 DED EMP ONLY	206.42
			MED $1,000 DED EMP/FAM	2,750.36
			MED $1,000 DED EMP/SPOUSE	499.95
			MED $2,500 DED EMP/CHILD	303.21
			MED $2,500 DED EMP ONLY	167.52
			MED $2,500 DED EMP/FAMILY	563.64
		GODFREY'S INDOOR SHOOTING AND ARCHERY	VEST	852.88
		OTA PIKEPASS	PATROL SERV	19.00
			PATROL SERV	40.40
		CITY OF CHICKASHA-(ACH) OKLAHOMA POLIC	POLICE PENSION	5,419.02
			POLICE PENSION	4,305.92
		OMAG WORKERS'COMPENSATION	PARTOL SERVICES	27,555.75
		TRANSFER ACCOUNT	FICA	3,474.58
			FICA	2,215.51
			MEDICARE	841.63
			MEDICARE	518.15
			TOTAL:	61,274.62
INVESTIGATIONS	GENERAL FUND	BLUE CROSS BLUE SHIELD OF OKLAHOMA 202	DENTAL EMP/CHILD	71.64
			DENTAL EMP/FAMILY	97.34
			MED $1,000 DED EMP/CHILD	373.62
			MED $1,000 DED EMP/FAM	687.59
		CITY OF CHICKASHA-(ACH) OKLAHOMA POLIC	POLICE PENSION	1,539.23
			POLICE PENSION	1,242.09
		OMAG WORKERS'COMPENSATION	INVESTIGATIVE SERVICES	5,135.50
		TRANSFER ACCOUNT	FICA	715.52
			FICA	601.10
			MEDICARE	167.34
			MEDICARE	140.58
			TOTAL:	10,771.55
ANIMAL CONTROL	GENERAL FUND	MISC ONE-TIME V K&M SAFETY SOLUTIONS L	FIRE EXTINGUISHER	173.50
		VERDEN VET	CONTRACT VET SERVICES	900.00
		AT&T MOBILITY	ANIMAL CONTROL 1664	45.68

DEPARTMENT	FUND	VENDOR NAME	DESCRIPTION	AMOUNT
		PUBLIC SERVICE COMPANY OF OKLAHOMA	ANIMAL CONTROL	520.49
		BLUE CROSS BLUE SHIELD OF OKLAHOMA 202	DENTAL EMP ONLY	25.32
			MED $1,000 DED EMP ONLY	412.84
		OKLAHOMA MUNICIPAL RETIRE	OMRF	277.32
		OMAG WORKERS'COMPENSATION	ANIMAL CONTROL	623.00
		TRANSFER ACCOUNT	FICA	265.76
			FICA	284.61
			MEDICARE	62.15
			MEDICARE	66.56
		GONZALEZ PEST CONTROL		50.00
				50.00
			TOTAL:	3,757.23
MUNICIPAL COURT	GENERAL FUND	BLUE CROSS BLUE SHIELD OF OKLAHOMA 202	DENTAL EMP/SPOOUSE	25.45
			MED $1,000 DED EMP/SPOUSE	499.95
		OKLAHOMA MUNICIPAL RETIRE	OMRF	120.37
		OMAG WORKERS'COMPENSATION	MUNICIPAL COURT	29.00
		TRANSFER ACCOUNT	FICA	95.16
			FICA	95.86
			MEDICARE	22.26
			MEDICARE	22.42
			TOTAL:	910.47
DISPATCH SERVICES	GENERAL FUND	SPIC & SPAN COMMERCIAL CLEANING, LLC	2022 CLEANING SERVICE	408.70
		PUBLIC SERVICE COMPANY OF OKLAHOMA	DISPATCH	937.51
		BLUE CROSS BLUE SHIELD OF OKLAHOMA 202	DENTAL EMP/CHILD	143.28
			DENTAL EMP ONLY	12.66
			DENTAL EMP/FAMILY	97.34
			MED $1,000 DED EMP/CHILD	747.24
			MED $1,000 DED EMP/FAM	129.02
			MED $2,500 DED EMP ONLY	167.52
		OKLAHOMA MUNICIPAL RETIRE	OMRF	648.13
		DEPARTMENT OF PUBLIC SAFETY	MONTHLY BILL	535.00
		OMAG WORKERS'COMPENSATION	DISPATCH	174.00
		TRANSFER ACCOUNT	FICA	565.50
			FICA	533.88
			MEDICARE	132.25
			MEDICARE	124.86
			TOTAL:	5,356.89
NEIGHBORHOOD SERVICES	GENERAL FUND	OKLAHOMA CODE ENFORCE. AS	CODE ENFORCEMENT CLASS	165.00
			CODE ENFORCEMENT CLASS	165.00
			CODE ENFORCEMENT CLASS	150.00
			TOTAL:	480.00
PARK MAINTENANCE	GENERAL FUND	MISC ONE-TIME V K&M SAFETY SOLUTIONS L	FIRE EXTINGUISHER	379.50
		K&M SAFETY SOLUTIONS L	FIRE EXTINGUISHER	12.50
		K&M SAFETY SOLUTIONS L	FIRE EXTINGUISHER	127.50
		AT&T MOBILITY	LAKE CHICK	164.92
			PARK MAINT 1664	102.54
		PUBLIC SERVICE COMPANY OF OKLAHOMA	PARK MAINT	1,149.50
		BLUE CROSS BLUE SHIELD OF OKLAHOMA 202	DENTAL EMP/CHILD	71.64
			DENTAL EMP ONLY	50.64
			DENTAL EMP/FAMILY	48.67
			MED $1,000 DED EMP ONLY	619.26
			MED $1,000 DED EMP/FAM	687.59

DEPARTMENT	FUND	VENDOR NAME	DESCRIPTION	AMOUNT
			MED $2,500 DED EMP ONLY	167.52
		TURNPRO AQUATICS	POND TREATMENT SHANNON	659.00
		ROJAS REMODELING LLC	ROOF REPAIR BATHHOUSE	1,350.00
		ELECTRICAL TECHNOLOGIES INC	NORTH SHANNON ELECTRICAL	20,686.25
			NORTH SHANNON ELECTRICAL	47,562.70
		OKLAHOMA MUNICIPAL RETIRE	OMRF	834.87
		SUMMIT UTILITIES	PARK MAINT	176.18
		OMAG WORKERS'COMPENSATION	PARKS MAINT	1,574.75
		TRANSFER ACCOUNT	FICA	786.37
			FICA	708.26
			MEDICARE	183.93
			MEDICARE	165.64
		ALERT 360	ACCT: 008174039	98.42
		UNIFIRST HOLDINGS, L.P.	PARK MAINT	416.03
		FASTENAL COMPANY	BATHROOM SUPPLIES	2,398.17
			TOTAL:	81,182.35
SPORTS COMPLEX	GENERAL FUND	MISC ONE-TIME V K&M SAFETY SOLUTIONS L	FIRE EXTINGUISHER	25.00
		EXPRESS SERVICES INC	TEMP EMPLOYEES	1,904.95
			TEMP WORK	1,372.24
			TEMP WORK	1,948.16
		PUBLIC SERVICE COMPANY OF OKLAHOMA	SPORTS COMPLEX	4,124.99
		NPVAL	APPRAISAL	2,500.00
		OKLAHOMA MUNICIPAL RETIRE	OMRF	65.84
		SUMMIT UTILITIES	SPORTS COMPLEX	855.45
		OMAG WORKERS'COMPENSATION	SPORTS COMPLEX	1,181.25
		P & K EQUIPMENT	EQUIPMENT REPAIR	1,030.81
			EQUIPMENT REPAIR	1,388.73
		TRANSFER ACCOUNT	FICA	89.34
			FICA	57.33
			MEDICARE	20.89
			MEDICARE	13.41
			TOTAL:	16,578.39
SHANNON SPRINGS (FOL)	GENERAL FUND	HERC RENTALS	LIFT RENTAL FOL	2,450.00
			LIFT RENTAL FOL	2,450.00
		EXPRESS SERVICES INC	TEMP EMPLOYEES	3,682.77
			TEMP WORK FOL	2,657.34
			TEMP WORK FOL	3,116.19
			TOTAL:	14,356.30
DONATIONS	DONATIONS FUND	GT DISTRIBUTORS	AMMO	818.80
		CHIEF FIRE AND SAFETY INC	(22) NEW HOSES	4,950.00
			TOTAL:	5,768.80
EMERGENCY MEDICAL SERV	EMERGENCY MED SERV	ZOLL MEDICAL CORPORATION	(11) SENSORS	7,684.71
		STRYKER MEDICAL	MAINTENANCE AGREE	4,921.60
		AT&T MOBILITY	EMS	91.50
		PUBLIC CONSULTING GROUP, INC	MEDICAID COST REPORT	27,611.93
		QUICK MED HOLDINGS LLC	INV#20539	1,031.61
			AUG 2022	2,533.32
			INV#18505	208.55
		L3HARRIS TECHNOLOGIES, INC	(10) PORTABLE RADIOS	40,922.95
		OTA PIKEPASS	EMS	128.98
			EMS	163.77
		OKLAHOMA FIREFIGHTERS	FIRE PENSION	14,009.93

DEPARTMENT	FUND	VENDOR NAME	DESCRIPTION	AMOUNT
			FIRE PENSION	13,764.51
		OMAG WORKERS'COMPENSATION	EMS	23,707.25
		TRANSFER ACCOUNT	MEDICARE	723.71
			MEDICARE	638.81
		IAFF LOCAL 2041 (HEALTH INS)	FIR/EECH OPTION A	1,402.80
			FIRE EE/CHILD(REN) DENTAL	41.60
			FIRE EE DENTAL	112.00
			FIRE FAMILY DENTAL	99.60
			FIRE EE/SPOUSE DENTAL	185.60
			FIR/EE OPTION A	1,620.00
			FIR/FAM OPTION A	1,424.00
			FIRE GROUP LIFE	40.33
			FIRE/EE OPTION D	200.40
			FIR/EESP OPTION A	4,198.40
			FIR/EE/CH VISION	33.60
			FIR/EE VISION	43.20
			FIR/FAM VISION	35.20
			FIR/EESP VISION	108.00
			TOTAL:	147,687.86
CHICKASHA INDUSTRIAL A	CHICKASHA INDUST A	ECONOMIC DEVELOPMENT COUN	EDC OCT 2022 PYMNT	30,866.66
		PUBLIC SERVICE COMPANY OF OKLAHOMA	SIGN	54.49
		BLUE CROSS BLUE SHIELD OF OKLAHOMA 202	DENTAL EMP ONLY	12.66
			MED $1,000 DED EMP ONLY	206.42
		OKLAHOMA MUNICIPAL RETIRE	OMRF	184.21
		OMAG WORKERS'COMPENSATION	CMA	29.25
		TRANSFER ACCOUNT	FICA	157.39
			FICA	155.68
			MEDICARE	36.81
			MEDICARE	36.41
			TOTAL:	31,739.98
EMERGENCY 911	E-911 FUND	AT&T	ACCT 4100728394589	71.00
		SUDDENLINK B2B DEPT 1264	INTERNET SERVICES	1,526.00
		PUBLIC SERVICE COMPANY OF OKLAHOMA	SIREN	4.93
			SIREN	23.62
		AT&T	EMS 0628	3,594.24
			TOTAL:	5,219.79
POLICE TRAINING	POLICE TRAINING FU	OBRIEN, GILLIAN	TUITION REIMBURSEMENT	2,718.00
			TOTAL:	2,718.00
NON-DEPARTMENTAL	CHICKASHA MUNICIPA	FRITZI'S LIQUOR	FRITZI'S LIQUOR	1,887.25
		CMS WILLOWBROOK INC	REFUND FOR METER TAP	587.83
			TOTAL:	2,475.08
UTILITY BILLING	CHICKASHA MUNICIPA	US PAYMENTS LLC	MONTHLY KIOSK - IINV 02786	195.00
		DATAPROSE	MONTHLY BILLING INV DP2204	4,250.97
		BLUE CROSS BLUE SHIELD OF OKLAHOMA 202	DENTAL EMP/CHILD	71.64
			DENTAL EMP ONLY	12.66
			MED $1,000 DED EMP/CHILD	373.62
			MED $1,000 DED EMP ONLY	206.42
		OKLAHOMA MUNICIPAL RETIRE	OMRF	440.33
		OMAG WORKERS'COMPENSATION	UTILITY BILLING	891.50
		TRANSFER ACCOUNT	FICA	372.86
			FICA	373.23

DEPARTMENT	FUND	VENDOR NAME	DESCRIPTION	AMOUNT
			FICA	13.87
			MEDICARE	87.20
			MEDICARE	87.28
			MEDICARE	3.24
			TOTAL:	7,379.82
CMA - CAPITAL PROJECTS	CHICKASHA MUNICIPA	FERGUSON WATERWORKS	20" hYMAX REP COUP	3,700.89
		UTILITY TECHNOLOGY SERVICES	PJ ADPTS.	1,971.73
			COUPLINGS	478.69
			FORD FSC-632"X6CLPAP	785.10
			FORD FSC-632"X6CLPAP	902.29
			MXU	4,875.00
			FORD FSC-632"X6CLPAP	2,355.29
			TOTAL:	15,068.99
CMA GENERAL	CHICKASHA MUNICIPA	TDS TELECOM	INVOICE 12/22	51.19
			TOTAL:	51.19
PUBLIC WORKS ADMIN	CHICKASHA MUNICIPA	BLUE CROSS BLUE SHIELD OF OKLAHOMA 202	DENTAL EMP/FAMILY	97.34
			MED $1,000 DED EMP/FAM	687.59
			MED $2,500 DED EMP/FAMILY	563.64
		OTA PIKEPASS	PUBLIC WORKS	13.95
			PUBLIC WORKS	8.35
		OKLAHOMA MUNICIPAL RETIRE	OMRF	425.44
		OMAG WORKERS'COMPENSATION	PUBLIC WORKS	2,400.50
		TRANSFER ACCOUNT	FICA	298.56
			FICA	354.20
			MEDICARE	69.82
			MEDICARE	82.84
			TOTAL:	5,002.23
SANITATION DEPARTMENT	CHICKASHA MUNICIPA	BLUE CROSS BLUE SHIELD OF OKLAHOMA 202	DENTAL EMP/SPOOUSE	25.45
			MED $1,000 DED EMP/SPOUSE	499.95
		OKLAHOMA MUNICIPAL RETIRE	OMRF	101.46
		OMAG WORKERS'COMPENSATION	SANITATION	2,926.25
		TRANSFER ACCOUNT	FICA	78.16
			FICA	79.75
			MEDICARE	18.28
			MEDICARE	18.65
		UNIFIRST HOLDINGS, L.P.	SANITATION	60.30
			SANITATION	12.05
			TOTAL:	3,820.30
WATER PLANT	CHICKASHA MUNICIPA	FT COBB RES MAS CONS DIST	WATER CONTRACT-DEC 22	33,840.98
		PUBLIC SERVICE COMPANY OF OKLAHOMA	WATER PLANT	13,278.76
		CKENERGY ELECTRIC COOPERATIV	WATER PLANT	11,020.65
		OKLAHOMA ELECTRIC COOP	ACCT: 4616200100	156.64
		SUMMIT UTILITIES	WATER PLANT	118.77
			WATER PLANT	49.59
		RURAL WATER DIST.#7	RWD #7 INV OCT 22	2,467.03
			TOTAL:	60,932.42
WASTEWATER PLANT	CHICKASHA MUNICIPA	HUGHESNET	SME33359 -	114.55
		PUBLIC SERVICE COMPANY OF OKLAHOMA	WASTEWATER	41.36
			WASTEWATER PLANT	14,541.71
		SUMMIT UTILITIES	WASTEWATER PLANT	41.39

DEPARTMENT	FUND	VENDOR NAME	DESCRIPTION	AMOUNT
			TOTAL:	14,739.01
LINE MAINTENANCE DEPT	CHICKASHA MUNICIPA	OKIE LOCATE 811	2022M2062	1,888.80
		VERIZON WIRELESS	LINE MAINT	473.39
		BOBCAT OF OKLAHOMA CITY	LATCH & hINGE	140.47
		SOUTHWEST TRAILERS & EQUIPMENT, LLC	FURNISH & INSTAL TARPING	24,475.80
		MARSHALL AUTO PARTS	PARTS AND SUPPLIES	939.20
			PARTS AND SUPPLIES	60.43
			PARTS AND SUPPLIES	698.88
			PARTS AND SUPPLIES	114.83
			PARTS AND SUPPLIES	10.80
			PARTS AND SUPPLIES	41.21
		AT&T MOBILITY	LINE MAINT 1664	202.12
		BLUE CROSS BLUE SHIELD OF OKLAHOMA 202	DENTAL EMP ONLY	50.64
			DENTAL EMP/FAMILY	146.01
			DENTAL EMP/SPOOUSE	50.90
			MED $1,000 DED EMP ONLY	412.84
			MED $1,000 DED EMP/FAM	687.59
			MED $1,000 DED EMP/SPOUSE	499.95
			MED $2,500 DED EMP ONLY	335.04
			MED $2,500 DED EMP/FAMILY	563.64
		OKLAHOMA MUNICIPAL RETIRE	OMRF	1,005.78
		OMAG WORKERS'COMPENSATION	LINE MAINT	5,631.50
		TRANSFER ACCOUNT	FICA	942.90
			FICA	812.75
			MEDICARE	220.51
			MEDICARE	190.07
		ROSE STATE COLLEGE	TRAINING	446.00
		UNIFIRST HOLDINGS, L.P.	LINE MAINT	503.84
			LINE MAINT	273.93
			TOTAL:	41,819.82
LAKE CHICKASHA	CHICKASHA MUNICIPA	RANDALL SCOTT VAUGHN dba CHISOLM TRAIL	LAKE ABATEMENTS	750.00
		AT&T MOBILITY	LAKE CHICK	39.14
		EDWARDS ENTERPRISES RENTAL	TOILETS AT LAKE	500.00
		CKENERGY ELECTRIC COOPERATIV	1474.52	1,473.61
		OMAG WORKERS'COMPENSATION	LAKE CHICKASHA	393.75
			TOTAL:	3,156.50
BUILDING MAINTENANCE	CHICKASHA MUNICIPA	HUGHESNET	SME33358	130.35
		ATLINK SERVICES LLC	INV 3750320221013-1	177.00
		CUMMINS SALES AND SERVICE	REPAIR P W GENERATOR	1,570.06
		MARSHALL AUTO PARTS	PARTS AND SUPPLIES	323.92
			PARTS AND SUPPLIES	440.84
		SPIC & SPAN COMMERCIAL CLEANING, LLC	2022 CLEANING SERVICE	830.50
			2022 CLEANING SERVICE	1,595.00
			2022 CLEANING SERVICE	303.00
		PUBLIC SERVICE COMPANY OF OKLAHOMA	BUILDING	1,303.61
		BLUE CROSS BLUE SHIELD OF OKLAHOMA 202	DENTAL EMP ONLY	12.66
			MED $1,000 DED EMP ONLY	206.42
		WALLER ICE LLC	OPEN PO FOR ICE	220.72
			OPEN PO FOR ICE	220.72
		DEHART AIR CONDITIONING AND ELECTRONIC	PREV. MAINT INV84143	4,474.58
			PREV. MAINT INV 82953	4,474.58
		OKLAHOMA MUNICIPAL RETIRE	OMRF	115.84
		SUMMIT UTILITIES	BUILDING MAINTENANCE	47.74

DEPARTMENT	FUND	VENDOR NAME	DESCRIPTION	AMOUNT
			BUILDING MAINT	92.67
		AT&T	BUILDING MAINT	7,326.69
		OMAG WORKERS'COMPENSATION	BUILDING	511.00
		TRANSFER ACCOUNT	FICA	94.56
			FICA	95.96
			MEDICARE	22.12
			MEDICARE	22.44
		ALERT 360	ACCT: 008174039	85.68
		UNIFIRST HOLDINGS, L.P.	BUILDING MAINT	31.20
			BUILDING MAINT	6.80
			TOTAL:	24,736.66
AIRPORT	AIRPORT	SPIC & SPAN COMMERCIAL CLEANING, LLC	2022 CLEANING SERVICE	207.55
		PUBLIC SERVICE COMPANY OF OKLAHOMA	AIRPORT	169.89
		BLUE CROSS BLUE SHIELD OF OKLAHOMA 202	DENTAL EMP ONLY	12.66
			DENTAL EMP/SPOOUSE	25.45
			MED $1,000 DED EMP ONLY	206.42
			MED $1,000 DED EMP/SPOUSE	129.02
		OKLAHOMA MUNICIPAL RETIRE	OMRF	223.77
		CULLIGAN/WRIGHT WATER	COOLERS-WATER	9.00
		OMAG WORKERS'COMPENSATION	AIRPORT	625.50
		TRANSFER ACCOUNT	FICA	177.16
			FICA	183.80
			MEDICARE	41.43
			MEDICARE	42.98
		UNIFIRST HOLDINGS, L.P.	AIRPORT	86.36
			AIRPORT	93.87
			AIRPORT	43.18
			TOTAL:	2,278.04
LIBRARY (ODOL)	ARPA TARGETED GRAN	T-MOBILE USA INC	T-MOBILE USA INC	267.75
		AMAZON CORPORATE CREDIT	GLOVES, MASKS, WIPES	33.48
			TOTAL:	301.23
CAPITAL PROJECTS	CAPITAL PROJECTS F	RANDALL SCOTT VAUGHN dba CHISOLM TRAIL	SIDE WALK DESIGN	2,062.50
		FIRST NATIONAL BANK & TRU	LOAN 101019634 - DEC PAYOF	4,997.23
			LOAN 101019634	5,029.00
			TOTAL:	12,088.73
DEDICATED SALES TAX	CIP-DEDICATED SALE	DOLESE BROS CO	CONCRETE	129.86
			CONCRETE	406.87
			CONCRETE	117.57
			CONCRETE	151.58
			CONCRETE	407.77
			TOTAL:	1,213.65
POLICE BOND	POLICE BOND FUND	CITY OF CHICKASHA	POLICE BOND TO POLICE TRAI	419.21
		CITY OF CHICKASHA	POLICE FINES-FEES	7,920.58
		CLEET	CLEET EDUC-TRAINING	458.01
		OSBI	AFIS FEES	458.01
			FORENSIC FEES	438.62
			TOTAL:	9,694.43
COMBINED INSURANCE	COMBINED INSURANCE	OMAG	DEDUCTIBLE - HASKELL TORT	3,000.00
			TOTAL:	3,000.00

DEPARTMENT	FUND	VENDOR NAME	DESCRIPTION	AMOUNT
COMPENSATED ABSENCES	COMPENSATED ABSENC	TRANSFER ACCOUNT	FICA	957.82
			MEDICARE	308.43
			TOTAL:	1,266.25
NON-DEPARTMENTAL	AP/PAYROLL CASH FU	COLONIAL LIFE & ACCIDENT INSURANCE COM	COLONIAL ACCIDENT	2.50
			COLONIAL GROUP ACCIDENT	577.13
			COLONIAL CANCER	103.93
			COLONIAL CRITICAL ILLNESS	358.27
			COLONIAL DISABILITY	342.51
		METLIFE	METLIFE VISION	419.88
		CITY OF CHICKASHA	UNION ASSESSMENT FEE	12.92
			GARNISHMENT FEE	60.00
		WASHINGTON NATIONAL INS. CO	GROUP #20057	339.47
		DEPARTMENT OF CHILDREN AND FAMILY SERV	PRESTON WOODS 002392363-01	287.00
			PRESTON WOODS 002392363-01	287.00
		BLUE CROSS BLUE SHIELD OF OKLAHOMA 202	DENTAL EMP/CHILD	87.01
			DENTAL EMP ONLY	107.78
			DENTAL EMP/FAMILY	243.20
			DENTAL EMP/SPOOUSE	63.30
			MED $1,000 DED EMP/CHILD	747.20
			MED $1,000 DED EMP ONLY	1,190.09
			MED $1,000 DED EMP/FAM	1,960.98
			MED $1,000 DED EMP/SPOUSE	971.57
			MED $2,500 DED EMP/CHILD	227.40
			MED $2,500 DED EMP ONLY	418.80
			MED $2,500 DED EMP/FAMILY	422.73
			MED #2,500 DED EMP/SPOUSE	101.43
		[redacted]	[redacted]	330.11
			[redacted]	330.11
		[redacted]	[redacted]	125.00
			[redacted]	125.00
		DEPARTMENT OF HUMAN SERVICES	[redacted]	266.57
			[redacted]	266.57
			[redacted]	133.38
			[redacted]	133.38
			[redacted]	164.87
			[redacted]	164.87
			[redacted]	180.00
			[redacted]	180.00
			[redacted]	151.75
			[redacted]	151.75
			[redacted]	177.56
			[redacted]	177.56
			[redacted]	100.00
			[redacted]	100.00
			[redacted]	126.37
			[redacted]	126.37
			[redacted]	123.75
			[redacted]	123.75
			[redacted]	175.78
			[redacted]	175.78
			[redacted]	196.50
			[redacted]	196.50
			[redacted]	106.75
			[redacted]	106.75
		OKLAHOMA FIREFIGHTERS	FIRE PENSION BUY BACK	174.01

DEPARTMENT	FUND	VENDOR NAME	DESCRIPTION	AMOUNT
			FIRE PENSION BUY BACK	174.01
			FIRE PENSION	9,006.38
			FIRE PENSION	8,848.63
		CITY OF CHICKASHA-(ACH) OKLAHOMA POLIC	POLICE PENSION	4,589.69
			POLICE PENSION	3,721.86
		OKLAHOMA MUNICIPAL RETIRE	OMRF	4,789.82
		FIREFIGHTERS SEC LOCAL 20	FIRE INSURANCE FEE	185.00
			FIRE UNION DUES	1,330.00
		FIREMENS SPECIAL FUND	FIRE SPECIAL FUND	230.00
		FRATERNAL ORDER OF POLICE	POLICE UNION	450.00
		DEARBORN NATIONAL	DEARBORN VOLUNTARY LIFE	547.26
		TRANSFER ACCOUNT	ENTITY 0037102001	4,650.00
			ENTITY 0037102001	4,650.00
			FEDERAL WITHHOLDING	39,300.62
			FEDERAL WITHHOLDING	25,275.24
			STATE INCOME TAX	11,846.00
			STATE INCOME TAX	9,204.00
			FICA	13,221.42
			FICA	10,591.93
			FICA	13.87
			MEDICARE	4,920.84
			MEDICARE	4,070.72
			MEDICARE	3.24
		AFLAC	AFLAC/PRETAX #K5881	9.45
		IAFF LOCAL 2041 (HEALTH INS)	FIRE CANCER	221.90
			FIR/EECH OPTION A	701.40
			FIRE EE/CHILD(REN) DENTAL	26.00
			FIRE EE DENTAL	40.00
			FIRE FAMILY DENTAL	116.20
			FIRE EE/SPOUSE DENTAL	46.40
			FIR/EE OPTION A	472.50
			FIR/EE OPTION B	62.10
			FIR/FAM OPTION A	2,492.00
			FIRE GROUP LIFE	172.31
			FIRE HARTFORD	170.00
			FIRE/EE OPTION D	50.10
			FIR/EESP OPTION A	1,049.60
			FIR/EE/CH VISION	16.80
			FIR/EE VISION	14.40
			FIR/FAM VISION	52.80
			FIR/EESP VISION	27.00
		CITY OF CHICKASHA FLEX SPENDING ACCOUN	UNREIMBURSED MEDICAL 23-19	1,219.78
			UNREIMBURSED MEDICAL 23-19	1,219.78
		IAFF - FIREPAC	IAFF FIREPAC	144.24
			TOTAL:	184,168.18

DEPARTMENT	FUND	VENDOR NAME	DESCRIPTION	AMOUNT

========== FUND TOTALS ==========		
11	GENERAL FUND	418,352.32
20	DONATIONS FUND	5,768.80
23	EMERGENCY MED SERV FUND	147,687.86
25	CHICKASHA INDUST AUTH	31,739.98
27	E-911 FUND	5,219.79
29	POLICE TRAINING FUND	2,718.00
31	CHICKASHA MUNICIPAL AUTH	179,182.02
39	AIRPORT	2,278.04
44	ARPA TARGETED GRANTS	301.23
52	CAPITAL PROJECTS FUND	12,088.73
53	CIP-DEDICATED SALES TAX	1,213.65
64	POLICE BOND FUND	9,694.43
71	COMBINED INSURANCE	3,000.00
72	COMPENSATED ABSENCES FUND	1,266.25
99	AP/PAYROLL CASH FUND	184,168.18
	GRAND TOTAL:	1,004,679.28

TOTAL PAGES: 14

SELECTION CRITERIA

SELECTION OPTIONS

VENDOR SET: 99-AP VENDOR LIST
VENDOR: All
CLASSIFICATION: All
BANK CODE: All
ITEM DATE: 11/09/2022 THRU 12/06/2022
ITEM AMOUNT: 99,999,999.00CR THRU 99,999,999.00
GL POST DATE: 0/00/0000 THRU 99/99/9999
CHECK DATE: 11/09/2022 THRU 12/06/2022

PAYROLL SELECTION

PAYROLL EXPENSES: NO
CHECK DATE: 0/00/0000 THRU 99/99/9999

PRINT OPTIONS

PRINT DATE: None
SEQUENCE: By Department
DESCRIPTION: Distribution
GL ACCTS: NO
REPORT TITLE: COUNCIL REPORT 11.7.22
SIGNATURE LINES: 0

PACKET OPTIONS

INCLUDE REFUNDS: YES
INCLUDE OPEN ITEM:NO

City of
CHICKASHA

Meeting Type: Council Agenda 12-5-2022

Meeting Date: 12/5/2022

Department: Finance **Agenda Item No. 4.c.**

AGENDA ITEM: Acceptance of Resolution 2022-27R amending the FY 22/23 Budget.

I. BACKGROUND/DESCRIPTION:

II. RECOMMENDED ACTION:
Accept of Resolution 2022-27R amending the FY 22/23 Budget.

III. FISCAL INFORMATION -

IV. FUND INFORMATION:

Dept. Director:	Fund	Account	Amount
	(To)		
	FUND	ACCOUNT	AMOUNT
Meeting Date: December 5, 2022	(From)		

V. ATTACHMENTS:
1. Res. 2022-27R Budget Amendment
2. Res. 2022-27R Exhibits

RESOLUTION NO. 2022-27R__

A RESOLUTION OF THE MAYOR AND COUNCIL OF THE CITY OF CHICKASHA, GRADY COUNTY, STATE OF OKLAHOMA, AMENDING THE CITY OF CHICKASHA ADOPTED BUDGET FOR FISCAL YEAR 2022-23

WHEREAS, pursuant to the Oklahoma Municipal Budget Act, 11 O.S. Section 17-201 through 17-216, all steps in the process of developing the City's Budget for FY 2022-23 were followed, culminating the adoption of the Budget by the Mayor and Council on June 20, 2022; and

WHEREAS, Sections 17-215 and 17-216 of the Oklahoma Municipal Budget Act specifically authorizes amendments to the adopted budget; and

WHEREAS, the Mayor and Council have determined a need to amend the adopted budget; and

NOW THEREFORE, be it resolved by the Mayor and Council of the City of Chickasha, Grady County, Oklahoma, that:

Section 1. The adopted FY 2022-23 Budget for the General Fund #11 is hereby amended and attached hereto as "Exhibit A"; and
FY 2022-23 Budget for the Capital Project Fund #52 is hereby amended and attached hereto as "Exhibit B"; and
FY 2022-23 Budget for the Combined Insurance Fund #71 is hereby amended and attached hereto as "Exhibit C".

This Resolution shall be in full force and effect from and after the passage and approval by the Mayor and Council of the City of Chickasha, Grady County, Oklahoma.

Adopted this 5th day of December 2022.

_____
Chris Mosley, Mayor

ATTEST:

_____
Susan M. McDaniel, CMC - City Clerk

(SEAL)

Exhibit A

CITY OF CHICKASHA

BUDGET AMENDMENT FORM

X INCREASE	____ DECREASE	____ TRANSFER

Fund: GENERAL
Fund No.: 11
Amendment No.: 13
Fiscal Year: 2022-2023

Account #	Account Name	Estimated Revenue(s) Increase	Estimated Revenue(s) Decrease	Appropriation(s) Increase	Appropriation(s) Decrease
4500-071	TRANSFER IN-COMBINED INSU	16,830.00			
552-6300-060	EQUIPMENT REPLACEMENT			16,830.00	
	TOTALS	16,830.00	-	16,830.00	-

EXPLANATION:
Transfer of Proceeds from Insurance Claim Settlement(s) received in the prior year from the Combined Insurance Fund and recognize expenditures for replacement of equipment in the Sports Complex Department, accordingly.

Approved by City Manager:

Date **Signature**

Approved by City Council:

Date **Signature**

Exhibit B

CITY OF CHICKASHA

BUDGET AMENDMENT FORM

X	INCREASE		DECREASE		TRANSFER

Fund: CAPITAL PROJECTS
Fund No.: 52
Amendment No.: 1
Fiscal Year: 2022-2023

		Estimated Revenue(s)		Appropriation(s)	
Account #	**Account Name**	**Increase**	**Decrease**	**Increase**	**Decrease**
4350-004	LEASE BONUS PROCEEDS	233,896.00			
552-6000-269	GRAPPLE/FREIGHTLINER TRUCK			233,896.00	
	TOTALS	233,896.00	-	233,896.00	-

EXPLANATION:

Purchase of a Petersen TL-3 Lightning Loader and a Freightliner Chassis truck for Public Works/Street Department

Approved by City Manager: _____ _____
Date **Signature**

Approved by City Council: _____ _____
Date **Signature**

Exhibit C

CITY OF CHICKASHA

BUDGET AMENDMENT FORM

X INCREASE	____ DECREASE	____ TRANSFER

Fund: COMBINED INSURANCE
Fund No.: 71
Amendment No.: 1
Fiscal Year: 2022-2023

		Estimated Revenue(s)		Appropriation(s)	
Account #	**Account Name**	**Increase**	**Decrease**	**Increase**	**Decrease**
4700-001	AVAILABLE FUND BALANCE	16,830.00			
571-5500-011	TRANSFER TO GENERAL			16,830.00	
	TOTALS	16,830.00	-	16,830.00	-

EXPLANATION:
Transfer of Proceeds from Insurance Claim Settlement(s) received in the prior year to the General Fund and recognize expenditures for replacement of equipment in the Sports Complex Department, accordingly.

Approved by City Manager:

Date **Signature**

Approved by City Council:

Date **Signature**

City of
CHICKASHA

Meeting Type: Council Agenda 12-5-2022

Meeting Date: 12/5/2022

Department: Police Department **Agenda Item No. 6.a.**

AGENDA ITEM: Discussion, consideration, and possible action to approve the yearly renewal maintenance contract with Motorola for the CAD, Mapping and RMS database in an amount not to exceed $33,516.60.

I. BACKGROUND/DESCRIPTION:

THe Police Department utilizes Motorola / Spillman for its CAD, Mapping & RMS database. This is an annual contract maintenance fee.

II. RECOMMENDED ACTION:

Staff recommends approving the annual maintenance contract with Motorola to support our CAD, Mapping & RMS in an amount not to exceed $33,516.60.

III. FISCAL INFORMATION -

IV. FUND INFORMATION:

Dept. Director: **G.G. Music, Jr., #301** **Interim Chief**	Fund	Account	Amount
	(To)		
	FUND	ACCOUNT	AMOUNT
Meeting Date:12.5.2022	(From) 11-503-5302-019		$33,516.60

V. ATTACHMENTS:

1. Motorola Contract Renewal

MOTOROLA SOLUTIONS

ORIGINAL INVOICE

Motorola Solutions, Inc.
500 West Monroe
Chicago IL 60661
United States
Federal Tax ID: 36-1115800

Visit our website at www.motorolasolutions.com

Transaction Number	Transaction Date	Transaction Total
8230386444	08-OCT-2022	**33,516.60 USD**

P.O. Number	P.O. Date	Customer Account No
		1209114731

Payment Terms	Payment Due Date
Net Due in 30 Days	07-NOV-2022

Bill To Address

CHICKASHA POLICE DEPARTMENT
ATTN: Accounts Payable
101 N 6TH ST
CHICKASHA OK 73018
United States

Ship To Address

CHICKASHA POLICE DEPARTMENT
101 N 6TH ST
CHICKASHA OK 73018
United States

IMPORTANT INFORMATION

For all invoice payment inquiries contact
watchguard.accounts.receivable@motorolasolutions.com
Telephone: 469-457-1993

Sales Order(s): USC000336164-R31-DEC-21 18:49:51

SPECIAL INSTRUCTIONS / COMMENTS
General Comment: Regular Invoice

Line Item #	Item Number	Description	Qty.	Unit Price (USD)	Amount (USD)
		Equipment at Site: 0005 1209114731 101 N 6TH ST CHICKASHA OK 73018 United States			
1	SSV00S00012A-SP	CAD MAINTENANCE (ENHANCED) - STANDARD:01-MAY-2022:30-APR-2023: Service From: 01-MAY-2022 Service To: 30-APR-2023	1	2,010.23	2,010.23
2	SSV00S00072A-SP	CAD MAPPING MAINTENANCE - STANDARD:01-MAY-2022:30-APR-2023: Service From: 01-MAY-2022 Service To: 30-APR-2023	1	1,351.99	1,351.99
3	SSV00S00178A-SP	DRIVER LICENSE SCANNING MAINTENANCE - STANDARD:01-MAY-2022:30-APR-2023: Service From: 01-MAY-2022 Service To: 30-APR-2023	1	400.82	400.82
4	SSV00S00181A-SP	E9-1-1 INTERFACE MAINTENANCE - STANDARD:01-MAY-2022:30-	1	534.42	534.42

Please detach here and return the bottom portion with your payment

Payment Coupon

Transaction Number	Customer Account No	Payment Due Date
8230386444	1209114731	07-NOV-2022

Transaction Total	Amount Paid
33,516.60 USD	

Please put your Transaction Number and your Customer Account Number on your payment for prompt processing.

CHICKASHA POLICE DEPARTMENT
ATTN: Accounts Payable
101 N 6TH ST
CHICKASHA OK 73018
United States

Payment Transfer Details

CHICAGO
WIRE Routing Transit Number: 026009593
ACH/EFT Routing Transit Number: 111000012
SWIFT: BOFAUS3N
Bank Account No: 3756319819

Send Payments To:

MOTOROLA SOLUTIONS
Motorola Solutions, Inc.
13104 Collections Center Drive
Chicago IL 60693
United States
Please provide your remittance details to:
US.remittance@motorolasolutions.com

DIVERSION CONTRARY TO EXPORT CONTROL LAW IS PROHIBITED

100000 02 04 000700 001947 P

MOTOROLA SOLUTIONS

Motorola Solutions, Inc.
500 West Monroe
Chicago IL 60661
United States
Federal Tax ID: 36-1115800

ORIGINAL INVOICE

Transaction Number	Transaction Date	Transaction Total
8230386444	08-OCT-2022	**33,516.60 USD**

P.O. Number	P.O. Date	Customer Account No
		1209114731

Payment Terms	Payment Due Date
Net Due in 30 Days	07-NOV-2022

Visit our website at www.motorolasolutions.com

Line Item #	Item Number	Description	Qty.	Unit Price (USD)	Amount (USD)
		APR-2023: Service From: 01-MAY-2022 Service To: 30-APR-2023			
5	SSV00S00184A-SP	EQUIPMENT MAINTENANCE MAINTENANCE - STANDARD:01-MAY-2022:30-APR-2023: Service From: 01-MAY-2022 Service To: 30-APR-2023	1	669.84	669.84
6	SSV00S00190A-SP	EVIDENCE BARCODE AND AUDITING MAINTENANCE - STANDARD:01-MAY-2022:30-APR-2023: Service From: 01-MAY-2022 Service To: 30-APR-2023	1	400.82	400.82
7	SSV00S00193A-SP	EVIDENCE MANAGEMENT MAINTENANCE - STANDARD:01-MAY-2022:30-APR-2023: Service From: 01-MAY-2022 Service To: 30-APR-2023	1	802.31	802.31
8	SSV00S00199A-SP	FLEET MAINTENANCE MAINTENANCE - STANDARD:01-MAY-2022:30-APR-2023: Service From: 01-MAY-2022 Service To: 30-APR-2023	1	400.82	400.82
9	SSV00S00226A-SP	GEARS ECRASH INTERFACE MAINTENANCE - STANDARD:01-MAY-2022:30-APR-2023: Service From: 01-MAY-2022 Service To: 30-APR-2023	1	1,213.54	1,213.54
10	SSV00S00262A-SP	IMAGING MAINTENANCE - STANDARD:01-MAY-2022:30-APR-2023: Service From: 01-MAY-2022 Service To: 30-APR-2023	1	1,351.99	1,351.99
11	SSV00S00265A-SP	INCODE COURTS INTERFACE THIRD PARTY MAINTENANCE - STANDARD:01-MAY-2022:30-APR-2023: Service From: 01-MAY-2022 Service To: 30-APR-2023	1	562.78	562.78
12	SSV00S00015A-SP	HUB MAINTENANCE (ENHANCED) - STANDARD:01-MAY-2022:30-APR-2023: Service From: 01-MAY-2022 Service To: 30-APR-2023	1	4,124.24	4,124.24
13	SSV00S00331A-SP	MOBILE ARREST FORM MAINTENANCE - STANDARD:01-MAY-2022:30-APR-2023: Service From: 01-MAY-2022 Service To: 30-APR-2023	1	1,010.58	1,010.58
14	SSV00S00334A-SP	MOBILE FIELD REPORT WITH FIELD INTERVIEW MAINTENANCE - STANDARD:01-MAY-2022:30-APR-2023: Service From: 01-MAY-2022 Service To: 30-APR-2023	1	1,351.99	1,351.99
15	SSV00S00352A-SP	MOBILE STATE & NATIONAL QUERIES MAINTENANCE - STANDARD:01-MAY-2022:30-APR-2023: Service From: 01-MAY-2022 Service To: 30-APR-2023	1	1,010.58	1,010.58
16	SSV00S00354A-SP	MOBILE VOICELESS CAD MAINTENANCE - STANDARD:01-MAY-2022:30-APR-2023: Service From: 01-MAY-2022 Service To: 30-APR-2023	1	1,010.58	1,010.58
17	SSV00S00405A-SP	OFFENDER TRACKING MAINTENANCE - STANDARD:01-MAY-2022:30-APR-2023: Service From: 01-MAY-2022 Service To: 30-APR-2023	1	802.31	802.31
18	SSV00S00417A-SP	PAWNED PROPERTY MAINTENANCE - STANDARD:01-MAY-2022:30-APR-2023: Service From: 01-MAY-2022 Service To: 30-APR-2023	1	400.82	400.82
19	SSV00S00432A-SP	PERSONNEL MANAGEMENT MAINTENANCE - STANDARD:01-MAY-2022:30-APR-2023: Service From: 01-MAY-2022 Service To: 30-APR-2023	1	802.31	802.31
20	SSV00S00438A-SP	PIN MAPPING MAINTENANCE - STANDARD:01-MAY-2022:30-APR-2023: Service From: 01-MAY-2022 Service To: 30-APR-2023	1	802.31	802.31
21	SSV00S00527A-SP	TRAFFIC INFORMATION MAINTENANCE - STANDARD:01-MAY-2022:30-APR-2023:	1	802.31	802.31

100000 03 04 000700 001948 P

DIVERSION CONTRARY TO EXPORT CONTROL LAW IS PROHIBITED

MOTOROLA SOLUTIONS

ORIGINAL INVOICE

Motorola Solutions, Inc.
500 West Monroe
Chicago IL 60661
United States
Federal Tax ID: 36-1115800

Transaction Number	Transaction Date	Transaction Total
8230386444	08-OCT-2022	**33,516.60 USD**

P.O. Number	P.O. Date	Customer Account No
		1209114731

Payment Terms	Payment Due Date
Net Due in 30 Days	07-NOV-2022

Visit our website at www.motorolasolutions.com

Line Item #	Item Number	Description	Qty.	Unit Price (USD)	Amount (USD)
		Service From: 01-MAY-2022 Service To: 30-APR-2023			
22	SSV00S00028A-SP	FLEX TOUCH MAINTENANCE - STANDARD:01-MAY-2022:30-APR-2023: Service From: 01-MAY-2022 Service To: 30-APR-2023	1	1,351.99	1,351.99
23	SSV00S00033A-SP	LAW RECORDS MAINTENANCE - STANDARD:01-MAY-2022:30-APR-2023: Service From: 01-MAY-2022 Service To: 30-APR-2023	1	2,703.97	2,703.97
24	SSV00S00036A-SP	MOBILE AVL AND MAPPING MAINTENANCE - STANDARD:01-MAY-2022:30-APR-2023: Service From: 01-MAY-2022 Service To: 30-APR-2023	1	1,010.58	1,010.58
25	SSV00S00038A-SP	MOBILE RECORDS MAINTENANCE - STANDARD:01-MAY-2022:30-APR-2023: Service From: 01-MAY-2022 Service To: 30-APR-2023	1	1,010.58	1,010.58
26	SSV00S00040A-SP	NIBRS MAINTENANCE - STANDARD:01-MAY-2022:30-APR-2023: Service From: 01-MAY-2022 Service To: 30-APR-2023	1	2,276.07	2,276.07
27	SSV00S00052A-SP	STATELINK MAINTENANCE - STANDARD:01-MAY-2022:30-APR-2023: Service From: 01-MAY-2022 Service To: 30-APR-2023	1	2,276.07	2,276.07
28	SSV00S00054A-SP	XML CITATION INTERFACE MAINTENANCE - STANDARD:01-MAY-2022:30-APR-2023: Service From: 01-MAY-2022 Service To: 30-APR-2023	1	1,069.75	1,069.75
		Site OK Tax at 0%			0.00
		Site Total			33,516.60

Total Tax OK 0.00

USD	**Subtotal**	**33,516.60**
USD	**Total Tax**	**0.00**
USD	**Total**	**33,516.60**
USD	**Amount Due**	**33,516.60**

DIVERSION CONTRARY TO EXPORT CONTROL LAW IS PROHIBITED

City of
CHICKASHA

Meeting Type: Council Agenda 12-5-2022

Meeting Date: 12/5/2022

Department: Police Department **Agenda Item No. 6.b.**

AGENDA ITEM: Discussion, consideration, and possible action to approve the Law Enforcement Support Office (LESO) renewal and addendum.

I. BACKGROUND/DESCRIPTION:

The Law Enforcement Support Office (LESO) provides access to excess DoD property to federal, state and local law enforcement agencies. Under this authority, excess DoD property might otherwise have been destroyed and may be conditionally transferred to participating law enforcement agencies across the United States and its Territories. No equipment is purchased for distribution. All items were DoD excess equipment or had been held as part of reserve stocks until no longer needed. Items requested via the program include clothing, office supplies, tools, rescue equipment, vehicles, and small arms. The Chickasha Police Department has participated in the program for years and forms must be updated. There are generally no costs associated with procurement under this agreement. All forms will be properly executed before submission to the LESO office.

II. RECOMMENDED ACTION:

Staff recommends approving the addendum and new signatures for LESO participation.

III. FISCAL INFORMATION -

IV. FUND INFORMATION:

Dept. Director: G.G. Music, Jr., #301 Interim Chief of Police	Fund	Account	Amount
	(To)		
	FUND	ACCOUNT	AMOUNT
Meeting Date:12.05.2022	(From) N/A		N/A

V. ATTACHMENTS:

1. LESO 2022 SPO Addendum
2. LESO 2021 SPO filled in
3. CGB-Civilian Governing Body Notice
4. LESO RTD Form

APPROVED
By Deborah Smith at 11:03 am, Sep 26, 2022

DEFENSE LOGISTICS AGENCY
DISPOSITION SERVICES
74 WASHINGTON AVENUE NORTH
BATTLE CREEK, MICHIGAN 49037-3092

GPL August 15, 2022

MEMORANDUM FOR LAW ENFORCEMENT SUPPORT OFFICE (LESO) PROGRAM PARTICIPATING LAW ENFORCEMENT AGENCY (LEA)

SUBJECT: Addendum to LESO Program State Plan of Operation (SPO)

This addendum amends the existing State Plan of Operation (dated February 2021) between the State and Law Enforcement Agency (LEA) and is herein referred to as the SPO Addendum. The SPO Addendum implements requirements found within Presidential Executive Order (EO) 14074 (Section 12), signed on May 25, 2022. In accordance with current SPO-Paragraph 17, notice is being provided of a unilateral change to the SPO. Unless an LEA takes immediate action to terminate the current SPO, the modifications or amendments will become binding.

1) ROLES AND RESPONSIBILITIES The State Shall:

a) Ensure each LESO Program participating Law Enforcement Agency (LEA) has signed the LESO-approved SPO Addendum no later than January 1, 2023. The SPO Addendum will be signed by the Chief Law Enforcement Official (CLEO) (or assigned designee) and the current State Coordinator (SC) (or authorized State Point of Contact [SPOC]).

b) Provide LESO with a comprehensive list of LEAs who do not sign the SPO Addendum by January 1, 2023. LESO will restrict the LEA to ensure LEA may not request or receive "controlled" property as defined within this addendum.

2) MODIFICATION TO DEFINITION OF "CONTROLLED" PROPERTY This SPO Addendum adds the below items to the "controlled" property definitions currently found in the 2021 SPO. These items are added pursuant to EO 14074 which reestablishes EO 13688. In 2017, the Law Enforcement Equipment Working Group (established by EO 13688), further added, deleted and refined the definitions of "controlled" items in their annual equipment list review. Provisions within the 2021 MOA applicable to "controlled" property apply to the items listed below (regardless of DEMIL and/or DEMIL Integrity Code). Title and ownership of the "controlled" property listed below remains with the DoD in perpetuity and will not be relinquished to the LEA (regardless of DEMIL and/or Integrity Code). The LESO retains final authority to determine what items qualify as "controlled" property. The below items listed in Section 1.2 of Law Enforcement Equipment Working Group (LEEWG) Recommendations (as modified in 2017), will be managed and issued as controlled property unless other restrictions or conditions are noted:

a) *Manned Aircraft, Fixed Wing:* Powered aircraft with a crew aboard, such as airplanes, that use a fixed wing for lift. (Note: These items were previously listed as controlled in LESO Program. Any aircraft without commercial application are prohibited).

b) *Manned Aircraft Rotary Wing:* Powered aircraft with a crew aboard, such as helicopters, that use a rotary wing for lift. (Note: These items were previously listed as controlled in LESO Program. Any aircraft without commercial application are prohibited).

c) *Unmanned Aerial Vehicles*: A remotely piloted powered aircraft without a crew onboard. (Note: These items are not currently issued in the LESO Program).

d) *Armored Vehicles, Wheeled*: Any wheeled vehicle either purpose-built or modified to provide ballistic protection to its occupants, such as a Mine-Resistant Ambush Protected (MRAP) vehicle or an Armored Personnel Carrier (APC). These vehicles are sometimes used by law enforcement personnel involved in dangerous operating conditions, including active shooter or similar high-threat situations. These vehicles often have weapon-firing ports. (Note: These vehicles were previously considered controlled due to DEMIL code and are now prohibited unless certification requirements in Section 3 are met).

e) *Tactical Vehicles, Wheeled*: A vehicle purpose-built to operate on- and off- road in support of military operations, such as a High Mobility Multi-purpose Wheeled Vehicle (HMMWV), 2.5-ton truck, 5-ton truck, or a vehicle with a breaching or entry apparatus attached. These vehicles are sometimes used by law enforcement in rough terrain or inclement weather for search and rescue operations, as well as other law enforcement functions. This excludes commercially available vehicles not tactical in nature, such as pick-up trucks or SUVs. (Note 1: This is LEEWG modified definition from 2017. Note 2: All tactical vehicles will now be considered controlled, and title will not pass. Note 3: Armored vehicles in this category will be considered prohibited unless certification requirements in Section 3 are met).

f) *Command and Control Vehicles:* Any wheeled vehicle either purpose-built or modified to facilitate the operational control and direction of public safety units responding to an incident. Command and control vehicles provide a variety of capabilities to incident Commander, including, but not limited to, the provision for enhanced communications and other situational awareness capabilities. Command and Control Vehicles are similar to a recreational vehicle and can accommodate multiple people at multiple workstations in the command center. This category does not include SUVs and is not intended for other types of vehicles that could serve as a command-and-control center. (Note 1: This is the LEEWG modified definition from 2017. Note 2: Armored vehicles in this category will be considered prohibited unless certification requirements in Section 3 are met).

g) *Specialized Firearms and Ammunition Under .50-Caliber (excludes firearms and ammunition designed for regularly assigned duties) and less lethal launchers*: Weapons and corresponding ammunition for specialized operations or assignment. This includes launchers specifically designed and built to launch less lethal projectiles. This excludes weapons such as service issued handguns, rifles or shotguns that are issued or approved by the agency to be used by all sworn officers/deputies during the course of regularly assigned duties. (Note 1: This is the LEEWG modified definition from 2017. Note 2: The LESO Program only issues weapons under .50 caliber that are designed for regularly assigned duties).

h) *Explosives and Pyrotechnics*: Includes "flash bangs" as well as explosive breaching tools often used by special operations units. (Note: These items were previously prohibited in the LESO Program and are now specifically prohibited in EO 14074).

i) *Breaching Apparatus*: Tools designed to provide rapid entry into a building or through a secured doorway. These tools may be mechanical in nature (a battering ram connected to a vehicle or a propellant), ballistic (slugs), or explosive. This category does not include dual purpose tools such as a sledgehammer or bolt cutter. (Note: This is the LEEWG modified definition from 2017).

j) *Riot/Crowd Control Batons:* Non-expandable of greater length (more than 24 inches) than service-issued types and are intended to protect its wielder during crowd control situations by providing distance from assailants. This category includes all batons with advanced features such as tear gas discharge, electronic or "stun" capabilities. (Note: This is the LEEWG modified definition from 2017).

k) *Riot Helmets:* Helmets designed to protect the wearer's face and head from injury during melees from projectiles including rocks, bricks, liquids, etc. Riot helmets include a visor which protects the face. (Note 1: The LEEWG removed these items from the controlled list in 2017. Note 2: LESO does not issue Kevlar helmets based on DoD policy).

l) *Riot/Crowd Control Shields:* Shields intended to protect wielders from their head to their knees in crowd control situations. Most are designed for the protection of the user from projectiles including rocks, bricks, and liquids. Some afford limited ballistic protection as well. (Note: This is the LEEWG modified definition from 2017).

3) PROHIBITED ITEMS THAT MAY BE ISSUED FOR LIMITED PURPOSES EO 14074 lists the below items as "prohibited" for issue under the LESO Program; however identifies specific authorized uses for these "prohibited" items if requested, utilized and annually certified as being used only in authorized manners. When utilized in an authorized manner (as indicated in the below example descriptions), the items are categorized as "controlled" property.

a) *Long Range Acoustic Devices (LRAD) that do not have commercial application*- LRADs are capable of directing sound over great distances at extreme volume in more geographical precision than an ordinary speaker. Certain LRAD capabilities which are aimed at dispersing individuals or groups as a kinetic use-of-force shall not be used. Examples of LRAD capabilities that shall not be used include (but are not limited to) attention commanding alert tones, powerful warning tones and/or deterrent tones.

i) *Authorized uses*- LRADs may only be utilized as a public address system for commercial purposes. Any other use is not authorized.

ii) *Annual Certification Requirements*- During the LESO Program annual inventory, LEAs with LRADs must certify that the LRAD is utilized exclusively as a public address system for commercial purposes. An LEAs signature on the SPO Addendum agreeing to these new terms will serve as initial certification.

iii) LEAs that do not have a current SPO Addendum on file by January 1, 2023 or who fail to annually certify the LRAD is being used in an authorized manner must return LRAD(s) to DLA Disposition Services.

b) *Vehicles that do not have commercial application*- This includes all tracked and armored vehicles, such as a Mine-Resistant Ambush Protected (MRAP), Armored Personnel Carrier (APC), or Armored HMMWV. (Note: This category excludes vehicles with commercial application, such as pick-up trucks, non-armored HMMWVs, 2.5-ton trucks, 5-ton trucks, or SUVs. The LESO Program identifies/defines vehicles with "commercial application" as items with a DEMIL Code of "A" or DEMIL "Q" (with an Integrity Code of 6) that may be sold to the general public under DoD sales programs).

i) *Authorized uses*- EO 14074 allows limited transfer of vehicles that do not have commercial application if the LEA certifies that the vehicle will be used exclusively for disaster-related emergencies; active shooter scenarios; hostage or other search and rescue operations; or anti-terrorism preparedness, protection, prevention, response, recovery, or relief. Any other use of these vehicles is not authorized.

ii) *Annual Certification Requirements*- During the LESO Program annual inventory, LEAs with these vehicles must certify that the vehicle(s) is utilized exclusively for disaster-related emergencies; active shooter scenarios; hostage or other search and rescue operations; or anti-terrorism preparedness, protection, prevention, response, recovery, or relief. An LEAs signature on the SPO Addendum agreeing to these new terms will serve as initial certification.

iii) LEAs that do not have a current SPO Addendum on file by January 1, 2023 or who fail to annually certify that the vehicle(s) use is exclusively for disaster-related emergencies; active shooter scenarios; hostage or other search and rescue operations; or anti-terrorism preparedness, protection, prevention, response, recovery, or relief must return vehicle(s) to DLA Disposition Services.

4) ACQUIRING (OR RETAINING) CONTROLLED PROPERTY The State shall:

a) Review, verify and only submit to LESO for approval, requests for controlled property by LEAs who have current SPO and SPO Addendum on file with the state.

b) Ensure LEAs return controlled property to DLA Disposition Services if the Department of Justice (DOJ) determines or a Federal, State, Tribal, local, or territorial court enters a final judgment finding that the LEA has engaged in a pattern or practice of civil rights violations.

c) Ensure that prior to requesting/acquiring any controlled property, the LEAs:

i) Provide written or electronic notification to the local community of its intent to request controlled property. The notification must be translated into appropriate languages to inform individuals with limited English proficiency. The LESO Program would *recommend* that LEAs provide a notice of intent to request controlled property to the local community on or before January 1, 2023 and at the beginning of each fiscal year (October 1st) thereafter. This notification should include a comprehensive list of any controlled property that <u>may</u> be requested throughout the year. If this notice of intent does not include a specific controlled property item, such item may not be requested in the LESO Program until 30-days after an updated notice is published.

ii) Provide written or electronic notification to the city council or appropriate local Civilian Governing Body (CGB) of its intent to request controlled property and allow "reasonable opportunity to review" (normally 30-days). The LESO Program would *recommend* that LEAs provide a notice of intent to the CGB on or before January 1, 2023 and at the beginning of each fiscal year (October 1st) thereafter. This notification should include a comprehensive list of any controlled property that <u>may</u> be requested throughout the year. If this notice of intent does not include a specific controlled property item, such item may not be requested in the LESO Program until 30-days after an updated notice is published. Requests for controlled property must comport with all applicable approval requirements of the CGB.

(1) The above requirement includes elected Sheriff's who also shall notify their CGB or city or county government within their jurisdiction.

(2) In cases of disagreement between requesting LEAs and CGB, the Governor appointed LESO Program State Coordinator (SC) will obtain an advisory opinion from the States Attorney General's Office on whether CGBs are authorized by state law to deny the request.

iii) *Campus LEAs operating in Institutions of Higher Education (IHE)*- LEAs operating in IHEs otherwise referred to as "Campus Police" or "Campus LEAs" must also adhere to the requirements identified below:

(1) Obtain the IHE Board of Governors (or an equivalent body) *explicit approval* for the acquisition of controlled property. Such approval must be evidenced in the Campus LEAs request submitted to the LESO Program. Silence or inaction by the Campus LEAs Board of Governors does not constitute evidence of approval, and the "reasonable opportunity to review" (normally 30-days) standard does not apply to Campus LEA applications.

(2) Certify that their policies and training include specific provisions on using controlled property in a way that does not chill speech, is not disruptive to the educational environment, and does not foster a hostile climate among students.

(3) Campus LEAs who receive controlled vehicles are required to remove the militaristic appearance (i.e., painting the vehicle a different color).

5) REGIONAL SHARING AGREEMENTS LESO Program participants who are part of a regional sharing agreement must also adhere to the following requirements. LEAs shall:

a) Provide information regarding the size of the region, including the number and size of the LEA with access to the requested controlled property and the estimated population served.

b) Ensure any controlled property providing support in a regional sharing agreement is utilized in accordance with the LESO Program SPO and this SPO Addendum.

c) Ensure that only LESO Program participants within the regional sharing agreement utilize the controlled property. Agencies/activities who are not LESO Program participants may not utilize or direct the use of controlled property obtained via the LESO Program.

d) Obtain SC/SPOC approval to temporarily conditionally loan property to another LESO Program participant within the regional sharing agreement (if mission requires). If the SC/SPOC approves the temporary conditional loan, it shall be done using an acceptable Equipment Custody Receipt (ECR). At the end of the temporary conditional loan, the item (s) shall be returned to the original LEA for accountability. All requests for conditional loans will be based on bona fide law enforcement requirements.

i) The LESO Program participant with controlled property on their inventory must certify that the other LESO Program participant in the regional sharing agreement requesting the property under a conditional loan:

(1) Has adopted requisite protocols (in Section 6 below) or will adopt those protocols <u>before</u> their personnel use the controlled property,

(2) Have provided requisite training (in Section 7 below) or will provide that training <u>before</u> their personnel use the controlled property, and

(3) Will adhere to the information collection and retention requirements (in Section 8 below).

ii) The LEA conditionally loaning the controlled property will remain accountable to the LESO Program to ensure the above provisions are met.

6) POLICIES/PROCEDURES LEAs must establish policies/procedures that are consistent with the standards listed below, in order to request or maintain controlled property. LEAs must:

a) Adopt and comply with general policing standards.

i) *Community Policing*- LEA policies/procedures should reflect the concept that trust and mutual respect between police and the communities they serve are critical to public safety. Community policing fosters relationships between law enforcement and the local community which promotes public confidence in LEAs therefore increasing LEA ability to investigate crimes and keep the peace.

ii) *Constitutional Policing*- LEA policies/procedures must emphasize that all police work should be carried out in a manner consistent with the requirements of the U.S. Constitution and federal law. Policies/procedures must include First, Fourth, and Fourteenth Amendment principles in law enforcement activity, as well as compliance with Federal and State civil rights laws. LEA certified law enforcement officers receive training on the rights embodied by such Constitutional Amendments and how these amendments inform policing policies/procedures.

iii) *Community Input and Impact*- LEA policies/procedures must identify mechanisms that LEAs will use to engage the communities they serve to inform them and seek their input about LEAs actions, role in, and relationships with the community. LEAs should make particular efforts to seek the input of communities where controlled property is likely to be used so as to mitigate the effect that such use may have on public confidence in the police. This could be achieved through the LEAs regular interactions with the public through community forums, town halls, or meetings with the Chief, or community outreach divisions.

b) Adopt and comply with controlled property standards.

i) *Appropriate Use of Controlled Property*- LEA policies/procedures must define appropriate use of controlled property; officers who are authorized to use controlled property must be trained on these policies/procedures. LEAs should examine scenarios in which controlled property will likely be deployed, the decision-making processes that will determine whether controlled property is used, and the potential that both use and misuse of controlled property could create fear and distrust in the community. Policies/procedures should consider whether measures can be taken to mitigate that effect (i.e., keep armored vehicles at a staging area until needed) and any alternatives to the use of such property and tactics to minimize negative effects on the community, while preserving officer safety.

ii) *Supervision of Use*- LEA policies/procedures must specify appropriate supervision of personnel operating or utilizing controlled property. Supervision must be tailored to the type of controlled property being used and the nature of the engagement or operation during which the property will be used. Policies/procedures must describe when a supervisor of appropriate authority is required to be present and actively overseeing the property being used.

iii) *Effectiveness Evaluation*- LEA policies/procedures must articulate that the LEA will regularly monitor and evaluate the effectiveness and value of controlled property to determine whether continued deployment and use is warranted on operational, tactical, and technical grounds. LEAs should routinely review after-action reports and analyze any data on, for example, how often controlled property is used or whether controlled property is used more frequently in certain law enforcement operations or in particular locations or neighborhoods.

iv) *Auditing and Accountability*- LEA must establish policies/procedures that are designed to prevent misuse, unauthorized use and/or loss of controlled property. LEA will hold personnel accountable to agree and comply with State, local, Tribal and Federal controlled property use policies/procedures.

v) *Transparency and Notice*- LEA policies/procedures must articulate that LEA will engage the community regarding controlled property, policies/procedures governing its use, and review of "significant incidents" (as defined in Section 8), with the understanding that there are reasonable limitations on disclosures of certain information and law enforcement sensitive operations and procedures.

c) Must adopt and comply with record-keeping requirements for controlled property.

i) Upon LESO request, LEAs must provide a copy of the general policing standards and specific controlled property standards that were adopted, to include any related policies/procedures.

ii) *Record-Keeping Requirement-* LEAs must retain comprehensive training records, either in the personnel file of the officer who was trained or by the LEAs training division or equivalent entity, for a period of at least three (3) years, and must provide a copy of these records, upon LESO request.

7) TRAINING LEAs that request or have acquired controlled property via the LESO Program must establish written policies/procedures for controlled property use, and all personnel who are authorized to use the controlled property will be trained on these policies/procedures. LEAs must:

a) Provide annual training on general policing standards to personnel who may use the controlled property.

b) Provide annual training on property standards to personnel who may use the controlled property.

c) Provide controlled property operational and technical training to personnel and ensure personnel are proficient prior to using controlled property.

d) Provide scenario-based training to personnel that combines constitutional and community policing principles with controlled property specific training. LEA personnel authorizing or directing the use of controlled property should have enhanced scenario-based training to examine, deliberate, and review the circumstances in which controlled property should or should not be used.

8) DOCUMENTATION REQUIRED FOR "SIGNIFICANT INCIDENTS" LEAs must collect and retain the information (described below) when any law enforcement activity involves a "Significant Incident" which requires (or results in) the use of controlled property on the LEAs inventory. A "Significant Incident" is defined as any law enforcement operation or action that involves: 1) a violent encounter among civilians or between civilians and the police, 2) a use-of-force that causes death or serious bodily injury, 3) a demonstration or other public exercise of First Amendment rights, or 4) an event that draws, or could be reasonably expected to draw, a large number of attendees or participants, such as those where advanced planning is needed. LEAs must:

a) Collect and retain documentation for controlled property used in a "Significant Incident" for a minimum of three (3) years after the incident has occurred. The LEA must provide documentation to LESO upon request.

i) Documentation should also be made available to the community the LEA serves in accordance with applicable policies/procedures with exemptions made concerning the disclosure of any sensitive information.

b) No new report or format is required for "Significant Incident" reports so long as information is easily accessible and organized. The required information may already exist in a police report, operations plan, officer daily log, incident report, after-action report or described in a use-of-force report. If required information (annotated below) is contained in a pre-existing reports, the LEA must simply ensure that the report includes information that controlled property was used. Required information is listed below:

i) Name and quantity of controlled property used, including relevant details such as make/model/serial number of controlled property used.

ii) Description of the LEA action/operation involving the controlled property.

iii) Identification of LEA personnel who used and directed the use of the controlled property.

iv) Identify or describe civilians who were the subject or target of LEA action/operation. For large crowds or multiple persons, the LEA must provide general description of the civilians (i.e., a crowd of approximately 250 people).

v) Result of the action/operation in which controlled property was used (i.e., arrests, citations, injuries or fatalities, use-of-force, victim extraction, or property damage).

9) ANNUAL CERTIFICATIONS By signing the SPO Addendum, the LEA agrees to the below certification statements. In addition, the LEA must annually certify compliance with the below certification statements during the Annual LESO Program Inventory. LEAs must:

a) Certify they have authorization from their CGB to participate in the LESO Program.

b) Certify they have provided their CGB and local community a comprehensive list of controlled property that may be requested through the LESO Program.

i) Notification may be made electronically or in writing and must be translated into appropriate languages to inform individuals with limited English proficiency. It is recommended this notification be done on an annual basis.

ii) If controlled property is not identified in the comprehensive list provided to the CGB and local community, an updated notification to CGB and local community must be made. The CGB and local community will be afforded 30-days to review what additional items are being requested.

c) Certify the request for controlled property comports/complies with all applicable approval requirements of the CGB.

d) Certify they have adopted and comply with controlled property standards (i.e., appropriate use, supervision of use, effectiveness evaluation, auditing/accountability of use, transparency/notice of use, and record-keeping requirements.

e) Certify they have provided annual training to personnel on the maintenance, sustainment, and appropriate use of controlled property, including respect for the rights of citizens under the Constitution of the United States and de-escalation of force.

f) *(LEAs with LRADs*) Certify that the LRAD is utilized exclusively as a public address system for commercial purposes.

g) Certify that controlled property vehicle(s) are utilized exclusively for disaster-related emergencies; active shooter scenarios; hostage or other search and rescue operations; or anti-terrorism preparedness, protection, prevention, response, recovery, or relief.

h) Certify that controlled property requiring a license (or other authorization), is only utilized by personnel who hold license (or other authorization) to operate such property.

i) Certify that controlled property will be returned to DLA Disposition Services when no longer needed.

j) Certify that they are abiding by the current LESO Program SPO and SPO Addendum, and maintain a signed copy of these documents on file.

k) Certify the Application for Participation on-file with LESO Program is current and accurately reflects the number of officers in the agency when fully staffed. (Note: If Application for Participation is not accurate, LEA must provide an updated Application for Participation to State Coordinators Office).

l) Certify they are compliant with LESO Program allocation limits. (Note: Property allocation limits are based on the number of officers at an LEA when fully staffed).

m) Certify that they agree to return the controlled property if the Department of Justice (DOJ) determines or a Federal, State, Tribal, local, or territorial court enters a final judgment finding that the LEA has engaged in a pattern or practice of civil rights violations.

n) *Campus LEAs (as described in Section 4)* must also certify that their policies and training include specific provisions on using controlled property in a way that does not chill speech, is not disruptive to the educational environment, and does not foster a hostile climate among students.

o) *Program participants who are part of a regional sharing agreement (as described in Section 5)*, must also certify that the other LESO Program participant in the regional sharing agreement requesting the property under a conditional loan: 1) Have adopted requisite protocols in (as described in Section 6) or will adopt those protocols before their personnel use the controlled property, 2) Have provided requisite training (as described in Section 7) or will provide that training before their personnel use the controlled property, and 3) Will adhere to the information collection and retention requirements (as described in Section 8).

10) SAVINGS CLAUSE/INTERPRETATION Nothing in this SPO Addendum shall be construed to impair or otherwise affect the requirements under the existing SPO between the State and LEA (dated February 2021), unless expressly amended herein. To the extent there is a disagreement concerning the interpretation of this SPO Addendum or the extent this SPO Addendum affects requirements under the existing SPO, the disagreement shall be resolved at the exclusive discretion of the LESO Program.

11) AGREEMENTS OF PARTIES By signing this SPO Addendum, the State and LEA acknowledges and accepts these changes. The SPO Addendum must be signed by LEAs no later than January 1, 2023 to remain eligible for LESO Program participation. The changes contained in this SPO Addendum are acknowledged and accepted by the following:

Governor-appointed State Coordinator State of OKLAHOMA

Title (Print): FEDERAL SURPLUS ADMINISTRATOR

Name (Print): ROGER STONE

Signature (Sign): Roger Stone Digitally signed by Roger Stone DN: dc=local, dc=OK, dc=agency, ou=ABC, ou=00090, ou=Users, ou=DCS, cn=Roger Stone Date: 2022.09.26 09:49:27 -05'00' Date MM/DD/YYYY): _____

Law Enforcement Agency Name: _____

Chief Law Enforcement Official (CLEO) Title (Print): _____

Name (Print): _____

Signature (Sign): _____ Date MM/DD/YYYY): _____

STATE PLAN OF OPERATION BETWEEN THE STATE OF OKLAHOMA AND THE CHICKASHA POLICE DEPARTMENT

PURPOSE This State Plan of Operation (SPO) is entered into between the State/United States (U.S.) Territory and Law Enforcement Agency (as identified above), to set forth the terms and conditions which will be binding on the parties with respect to Department of Defense (DoD) excess personal property conditionally transferred pursuant to 10 USC § 2576a, in order to promote the efficient, expeditious transfer of property and to ensure accountability of the same.

1) AUTHORITY The Secretary of Defense (SECDEF) is authorized by 10 USC § 2576a to transfer to Federal and State Law Enforcement Agencies (LEAs), personal property that is excess to the needs of the DoD, including small arms and ammunition, that the Secretary determines is suitable to be used by such agencies in law enforcement activities, with preferences for counter-drug/counter-terrorism, disaster-related emergency preparedness or border security activities, under such terms prescribed by the Secretary. The SECDEF has delegated program management authority to the DLA. The DLA Disp Svcs LESO administers the program in accordance with (IAW) 10 USC § 2576a, 10 USC § 280, DoDM 4160.21 and DLAI 4140.11. The DLA defines "law enforcement activities" as activities performed by governmental agencies whose primary function is the enforcement of applicable federal, State, and local laws and whose compensated law enforcement officers have powers of arrest and apprehension.

2) GENERAL TERMS AND CONDITIONS "DoD excess personal property" also known as "items", "equipment", "program property", or "property". "DLA Disposition Services Law Enforcement Support Office" also known as "1033 Program", "LESO Program", "the program", or "LESO". "State or U.S. Territory" also known as "the State", "State Coordinator (SC)", "State Point of Contact (SPOC)", or "SC/SPOC". "Law Enforcement Activities" also known as "agencies in law enforcement activities", "Law Enforcement Agency (LEA)", "program participant", or "State/LEA".

a) Property made available under this agreement is not for personal use and is for the use of authorized program participants only. All requests for property shall be based on bona fide law enforcement requirements. Authorized participants who receive property from the program will not loan, donate, or otherwise provide property to other groups or entities (i.e., public works, county garage, schools, etc.) that are not otherwise authorized to participate in the program. Property will not be obtained by program participants for the purpose of sale, lease, loan, personal use, rent, exchange, barter, transfer, or to secure a loan. To receive such property, on an annual basis the LEA shall certify that they have:

i) Obtained authorization of the relevant local governing body authority (i.e., city council, mayor, etc.).

ii) Adopted publicly available protocols for the appropriate use of controlled property, the supervision, and the evaluation of the effectiveness of such use, including auditing and accountability policies.

iii) Annual training in place and provides it to relevant personnel on the maintenance, sustainment, and appropriate use of controlled property, including respect for the rights of citizens under the Constitution of the U.S. and de-escalation of force.

b) All costs associated with the transportation, turn-in, transfer, repair, maintenance, insurance, disposal, repossession or other expenses related to property are the sole responsibility of the State/LEA. The State/LEA shall also be responsible to reimburse the U.S Government (USG) for costs incurred in retrieving and/or repossessing property impermissibly transferred by the State/LEA to unauthorized participants.

c) The State/LEA will maintain and enforce regulations designed to impose adequate security and accountability measures for controlled property to mitigate the risk of loss or theft of property. Program participants shall implement controls to ensure property made available under this agreement is used for official law enforcement use only. The State/LEA shall take appropriate administrative and/or disciplinary action against individuals that

violate provisions of the Memorandum of Agreement (MOA) between the Federal Government and the State/U.S. Territory and/or this SPO, including unauthorized use of property.

d) All property transferred to the State/LEA via the program is on an as-is, where-is basis.

e) LESO reserves the right to recall property issued to a State/LEA at any time.

f) General use of definitions/terms:

i) Demilitarization (DEMIL code)-a code assigned to DoD property that indicates the degree of required physical destruction, identifies items requiring specialized capabilities or procedures, and identifies items which do not require DEMIL but may require Trade Security Controls (TSC). Program participants are not authorized to conduct physical demilitarization of property.

ii) "Controlled property"-items with a DEMIL code of B, C, D, E, F, G, and Q (with an Integrity Code of "3". Title and ownership of controlled property remains with the DoD in perpetuity and will not be relinquished to the State/LEA. When a State/LEA no longer has a legitimate law enforcement use for controlled property, they shall notify the LESO and the property will be transferred to another program participating State/LEA (via standard transfer process) or returned to DLA Disp Svcs for disposition.

iii) "Non-controlled" property"-items with a DEMIL code of A or Q (with an Integrity Code of "6"). These items are conditionally transferred to the State/LEA and will remain on State/LEA accountable inventory for one year from the ship date. However, after one year from the ship date, DLA will relinquish ownership and title for the property to the State/LEA without issuance of further documentation. During this one year period, the State/LEA remains responsible for the accountability and physical control of the property and the LESO retains the right to recall the property. Participants should return any property in this one year period that becomes excess to their needs or they otherwise determine is not serviceable.

(1) The LEA receives title and ownership of DEMIL "A" and "Q6" property as governmental entities. Title and ownership of this property does not pass from DoD to any private individual or State/LEA official in their private capacity. Such property shall be maintained and ultimately disposed of IAW provisions in State and local laws that govern public property.

(2) Sales/gifting of DEMIL"A" and "Q6" property after one year from the ship date inconsistent with State/local law may constitute grounds to deny future participation in the program.

(3) After one year from ship date, DEMIL "A" and "Q6" property may be transferred, cannibalized for usable parts, sold, donated, or scrapped.

(4) Once the property is no longer on the LEA accountable inventory, the property is no longer subject to the annual physical inventory requirements and will not be inventoried during a LESO Program Compliance Review (PCR).

g) All physical transfers of property require LESO approval. Program participants will not physically transfer property until the LESO approval process is complete. Program participants may request their SC/SPOC approval to temporarily conditionally loan property to another program participant (if mission requires). If the SC/SPOC approves the temporary conditional loan, it shall be done using an acceptable Equipment Custody Receipt (ECR). At the end of the temporary conditional loan, the item (s) shall be returned to the original LEA for accountability. All requests for conditional loans will be based on bona fide law enforcement requirements.

h) The program may authorize digital signatures on required program documentation.

i) The State/LEA is not required to maintain insurance on controlled property, aircraft or other property with special handling requirements that remain titled to DoD. However, the State/LEA will be advised that if they elect

to carry insurance and the insured property is on the program inventory at the time of loss or damage, the recipient will submit a check made payable to DLA for insurance proceeds received in excess of their actual costs of acquiring and rehabilitating the property prior to its loss, damage, or destruction.

3) STATE PLAN OF OPERATION The State shall:

a) Assist in training LEAs with enrollment, property requests, transfers, turn-ins, and disposal procedures.

b) Adhere to the requirements outlined in the MOA between the Federal Government and the State/U.S. Territory and ensure MOA amendments or modifications are incorporated into this SPO and program participants are notified and acknowledge responsibility to comply with changes.

c) Submit a SPO to LESO that shall address procedures for determining LEA eligibility, allocation, equitable distribution of property, accountability, inventory, training, and education, State-level internal PCRs, export control requirements, procedures for turn-in, transfer, and disposal and other responsibilities concerning property.

d) Enter into written agreement with each LEA, via the LESO-approved SPO, to ensure program participants acknowledge the terms, conditions, and limitations applicable to property. This SPO must be signed by the current Chief Law Enforcement Official (CLEO) (or designee) and the current SC/SPOC.

e) Provide program participants the following information:

i) The LESO Program State POCs:

State Coordinator (SC): Roger Stone

State Point of Contact (SPOC): John Fletcher

ii) SC/SPOC Facility Information:

Physical Mailing Address: 304 S Miller Pl Oklahoma City, OK 73108

Email: john.fletcher@omes.ok.gov

Phone Number: (405) 425-2703 / (405) 425-2700

Hours of Operation: Monday-Friday 0800-1600 excluding State Holidays.

iii) Funding to administer the LESO Program at the State-level is provided via:

Service charges to our LEAs incurred when items are transferred.

4) PROPERTY ACCOUNTING SYSTEM The State will maintain access to Federal Excess Property Management Information System (FEPMIS) (or current property accounting system), to ensure LEAs maintain property books, to include, but not limited to, transfers, turn-ins, and disposal requests from an LEA or to generate these requests at the State-level and forward all approvals to the LESO for action. The State will:

a) Conduct quarterly reconciliations of State property records.

b) Ensure at least one person per LEA maintains access to the property accounting system. Users may be "active" or "inactive" in the system, so long as they are registered. Ensure registered users are employees of the State/LEA.

c) Ensure LEAs receive and account for property in the property accounting system within 30 days.

5) LESO WEBSITE The State shall access the LESO website for timely and accurate guidance, information, and links concerning the program and ensure that all relevant information is passed to the program participants.

6) ANNUAL TRAINING 10 USC § 280 provides that the SECDEF, in cooperation with the U.S. Attorney General, shall conduct an annual briefing of law enforcement personnel of each State (including law enforcement personnel of the political subdivisions of each State). Individuals who wish to attend are responsible for funding their own travel expenses. The briefing will include information on training, technical support, equipment, and facilities that are available to civilian law enforcement personnel from the DoD. The state shall provide program participants training material as discussed during the annual LESO training which includes information on property management best practices to include (but not limited to) searching for property, accounting for property on inventory, transfer and turn-in of property when it is no longer needed or serviceable.

7) ENROLLMENT The LESO shall establish and implement program eligibility criteria IAW 10 USC § 2576a, DLA Instructions and Manuals and this SPO and retains final approval/disapproval authority for application packages forwarded by the State. Non-governmental law enforcement entities such as private railroad police, private security, private academies, correctional departments, prisons, or security police at private schools/colleges are not eligible to participate. Fire departments (by definition) are not eligible to participate and should be referred to the DLA Fire Fighter program administered by USDA. Law enforcement agencies requesting program participation shall have at least one full-time law enforcement officer. Program property may only be issued to full-time/part-time law enforcement officers. Non-compensated reserve officers are not authorized to receive property. State law enforcement training facilities/ academies may be authorized to participate in the program given their primary function is the training of bona fide State/local law enforcement officers. Law enforcement training facilities/academies will be reviewed on a case-by-case basis. The State shall:

a) Validate the authenticity of state/LEAs that are applying for program participation. Only submit to the LESO those application packages that the SC/SPOC recommends/certifies are government agencies whose primary function is the enforcement of applicable federal, State, and local laws and whose compensated officers have the powers of arrest and apprehension. If the State forwards an unauthorized participant application package, this may result in a formal suspension of the State.

b) Have sole discretion to disapprove state/LEA application packages in their State. The SC/SPOC should provide notification to the LESO when application packages are disapproved at the State-level.

c) Ensure that screeners listed in the application package are employees of the LEA. A screener may only screen property for two LEAs. Contractors may not conduct screening on behalf of a LEA.

d) Make recommendation on what constitutes a “full-time” or “part-time” law enforcement officer.

e) Ensure LEAs update their account information annually, or as needed. This may require the LEA to submit an updated application package. An updated application package shall be submitted for (but is not limited to) the following: a change in CLEO, the addition or removal of a screener, a change in the LEA physical address or contact information, etc.

f) Provide the LEA a comprehensive program overview once approved by the LESO for enrollment. The overview will be done within 90-days of a LEA being approved to participate.

8) PROPERTY ALLOCATION

a) <u>The LESO shall:</u>

i) Upon receipt of a SC/SPOC validated request for property through the RTD website, will review and give preference to requisitions indicating that the requested property will be used in the counter-drug, counter-terrorism, disaster-related emergency preparedness, or border security activities of the requesting LEA. Program participants that request vehicles used for disaster-related emergency preparedness, such as high-

water rescue vehicles, should receive the highest preference.

ii) Require additional justification for small arms, aircraft, ammunition, and vehicles and to the greatest extent possible, ensure fair and equitable distribution of property based on current LEA inventory and justification for property.

iii) Reserve the right to determine and/or adjust allocation limits, to include the type, quantity and location of property allocated to the State/LEA. Generally, no more than one item (per part-time/full-time officer) will be allocated. Quantity exceptions may be granted by the LESO on a case-by-case basis based on the justification provided by the LEA. Currently, the following allocation limits apply:

(1) Robots: one (of each type) for every ten officers (full-time/part-time).

(2) High Mobility Multipurpose Wheeled Vehicle (HMMWV)/Up-Armored HMMWV (UAH): one vehicle for every three officers (full-time/part-time).

(3) Mine Resistant Ambush Protected (MRAP) / Armored Vehicles: two vehicles per LEA.

(4) Small arms: one (of each type) per officer (full-time/part-time).

(a) LESO may authorize over allocations of small arms in preparation for inevitable scenarios, i.e. training, equipment downtime (damage, routine maintenance, inspections) or other law enforcement needs. The chart below is the standard for small arms acceptable over-allocations:

(b) In instances where small arm allocation amounts exceed the "acceptable over-allocation" levels, the LESO will coordinate with States to verify accuracy of the officer count. If small arm allocation is still beyond acceptable levels, LESO may authorize one of the following: 1) an exception to policy, 2) a transfer, or 3) a turn-in.

Small Arms Acceptable Over-Allocations	
# of Officers	**# by type**
1-10	2 or less
11-25	3 or less
26-100	5 or less
101-299	8 or less
300 or more	10 or less

b) <u>The State shall:</u>

i) Assist the LEA in the use of electronic screening of property via the RTD website and shall access the RTD website a minimum of once daily (Monday-Friday) to review and process LEA requests for property. Property justifications shall be validated to ensure they meet the intent of 10 USC § 2576a as suitable for use by agencies in law enforcement activities. Prior to approving a request or transfer, review the LEAs property allocation report to prevent over allocation.

ii) Upon receipt of a valid LEA request for property, provide a recommendation to the LESO on the preference to be given to those requisitions for property that will be used in counter-drug, counter-terrorism, disaster-related emergency preparedness or border security activities of the recipient agency. Requests for vehicles used for disaster-related emergency preparedness, such as high-water rescue vehicles, should receive the highest preference. The State shall consider the fair and equitable distribution of property based on current LEA inventory and LEA justifications for property. The State shall ensure the type and quantity of property being requested by LEAs is reasonable and justifiable given the number of officers (full-time/part-time) and prior requisitions for similar items they have received (both controlled and non-controlled property). Generally, no more than one of any item per officer (full-time/part-time) will be allocated.

10) PROPERTY MANAGEMENT Certain controlled equipment shall have a documented chain of custody (i.e.

an acceptable ECR), including a signature of the recipient. Controlled property requiring an ECR: small arms (including parts and accessories), aircraft, vehicles, optics, and robots. It is encouraged to utilize ECRs for all controlled property. LEAs may request cannibalization on aircraft or vehicles. Cannibalization requests shall be submitted to the State for review. Cannibalization must be approved by the LESO prior to any cannibalization actions. The cannibalized end item shall be returned to DLA Disp Svcs within the timeframes determined by the LESO.

a) Aircraft-Aircraft will not be obtained by LEAs for the purpose of sale, lease, loan, personal use, rent, exchange, barter, transfer, or to secure a loan and shall be reported to the LESO at the end of their useful life. All aircraft are considered controlled property, regardless of DEMIL code. Aircraft that are no longer needed or serviceable shall be reported to the General Services Administration (GSA) for final disposition by the LESO Program Aircraft Specialist.

b) Vehicles-Program participants that request vehicles used for disaster-related emergency preparedness, such as high-water rescue vehicles, should receive the highest preference. Vehicles will not be obtained by LEAs for the purpose of sale, lease, loan, personal use, rent, exchange, barter, transfer, or to secure a loan and vehicles that are considered controlled property will be returned to DLA Disp Svcs at the end of their useful life. DLA Disp Svcs Field Activity/Site will identify qualifying DEMIL A or Q6 vehicles and may issue (upon LEA request) a Standard Form (SF) SF-97 to the LEA upon physical transfer of the vehicle. The LEA may modify the vehicle during the one year conditional transfer period.

c) Ammunition-LESO will support the U.S. Army (USA), in allocating ammunition to program participants. Ammunition obtained via the program will be for training use only. At the time of request, the LEA will certify in writing that the ammunition will be used for training use/purposes only. The USA will issue approved transfers directly to the State/LEA. The State/LEA is responsible for funding all packing, crating, handling, and shipping costs for ammunition. The LEA will make reimbursements directly to the USA. Ammunition will not be obtained by LEAs for the purpose of sale, lease, loan, personal use, rent, exchange, barter, transfer, or to secure a loan. Ammunition obtained via the program shall not be sold. Ammunition will be treated as a consumable item and not tracked in any DLA inventory system or inspected during PCRs. LESO shall track and maintain necessary records of ammunition that has been transferred to LEAs and will post all requests, approvals, and denials on the LESO public website.

d) Small arms:

i) Small arms will not be obtained by LEAs for the purpose of sale, lease, loan, personal use, rent, exchange, barter, transfer, or to secure a loan and shall be returned to DLA Disp Svcs at the end of their useful life. Cannibalization of small arms is not authorized.

ii) Temporary modifications to small arms are authorized; permanent modifications to small arms are not authorized (i.e. drilling holes in the lower receiver of a small arm). In cases of temporary modifications, all parts are to be retained and accounted for in a secured location under the original serial number for the small arm until final disposition is determined. If the modified small arm is transferred to another LEA, all parts will accompany the small arm to the receiving LEA.

iii) Small arms will be issued utilizing an acceptable ECR which obtains certain information about the property being issued to include (but is not limited to) the signature of the law enforcement officer who is accepting responsibility for the small arm(s), the serial number of the small arm, the date in which the law enforcement officer took possession of the small arm, etc.

iv) Small arms that are not carried on an officer's person or in the officer's immediate physical vicinity will be secured using "two levels of physical security". Two levels of physical security meaning two distinct lockable barriers, each specifically designed to render a small arm inaccessible and unusable to unauthorized persons. Lockable barriers meeting this description may be either manual or electronic.

v) Program participants no longer requiring program small arm(s) shall request authorization to transfer the small arm to another participating LEA or request authorization to turn-in/return the small arm. Transfers and turn-in requests shall receive final approval from the LESO; small arms will not physically move until the LESO provides official notification that the approval process is complete. When turning-in small arms to Anniston Army Depot, the LEA shall follow LESO turn-in guidance.

vi) Local destruction (DEMIL) of small arms is not authorized.

vii) Lost, Stolen or Destroyed (LSD) small arms:

(1) Program participants with multiple instances of LSD small arms in a five-year window will be assessed by DLA Disp Svcs to determine if a systemic problem exists IAW DLAI 4140.11.

(2) DLA OIG investigations may be initiated if small arms are improperly disposed of or become LSD while in program inventory. The State/LEA may be required to reimburse DLA the fair market value of the small arms when negligence, willful misconduct, or a violation of the MOA between the Federal Government and the State/U.S. Territory and/or this SPO is confirmed at the conclusion of the Financial Liability Investigation of Property Loss (FLIPL).

(a) Reimbursement will be within 60-days of the completion of the FLIPL.

(b) Title will never transfer to the recipient regardless of the status of the small arm.

(c) Payments due to DLA Disp Svcs, based upon the findings of the FLIPL, may be paid by one of three methods: 1) credit card via pay.gov, 2) cashier/ business check, or 3) wire transfer.

(3) In instances of LSD small arm recovery, DoD retains title in perpetuity and the small arm shall be immediately relinquished/surrendered back to the program.

11) PROGRAM COMPLIANCE REVIEWS (PCR)

a) The LESO shall:

i) Conduct PCRs to ensure that the SC/SPOC, and all LEAs within a State are compliant with the terms and conditions of the program as required by 10 USC § 2576a, the MOA between the Federal Government and the State/U.S. Territory and/or this SPO and any DLA Instructions and manuals regarding the program. PCRs are conducted to ensure property accountability, program compliance, and program eligibility.

ii) Conduct PCRs for participating States every 2 years, providing training to the State/LEA as needed.

iii) Reserve the right to conduct no notice PCRs, or require an annual review, or similar inspection, on a more frequent basis for any State/LEA.

iv) Intend to physically inventory 100% of property selected for review at each LEA during a PCR. The use of ECRs in lieu of physical inspection is discouraged during PCRs. Extensive use of the ECR (without prior coordination with LESO) may result in a non-compliance finding during the PCR.

v) Intend to review as much property as possible during a PCR.

(1) The goal is to review 20% of a State's overall small arms inventory.

(2) The goal for inventory selections (at LEAs selected for review) is 15% of an LEAs general property to include non-controlled property (DEMIL code A and Q6).

vi) Select LEAs not visited during the last three regularly scheduled PCR cycles (as applicable).

vii) Recommend corrective actions (which may include suspending a State/LEA from program participation) for findings of non-compliance identified during a PCR.

(1) The LESO shall issue corrective actions (with suspense dates) to the State, which will identify what is needed to rectify the identified deficiencies within the State/LEA.

(2) If the State/LEA fails to correct identified deficiencies within the LESO suspense dates, the LESO may move to restrict, suspend, or terminate the State/LEA from program participation.

(3) States found non-compliant for a PCR will be suspended for a minimum of 60-days and will not be reinstated until the State successfully passes a LESO-conducted PCR.

viii) Ensure the State/LEA understand that property shall be transferred to a participating agency with SC/SPOC and LESO approval or returned to DLA Disp Svcs when no longer needed or serviceable.

b) <u>The State shall:</u>

i) Assist the LESO as required, prior to, during and upon completion of the PCR.

ii) Assist in the coordination of the PCR daily schedule of events and forward the schedule to LEAs that have been selected for review.

iii) Contact LEAs that have been selected for the PCR via phone, email or in person to ensure they are aware of the schedule and are prepared for the PCR.

iv) Receive inventory selections from the LESO and forward them to the selected LEAs. The State shall ensure the LEA physically gathers the selected property in a central location (to the greatest extent possible) which will allow the LESO to physically inventory the property efficiently during the PCR.

v) Coordinate the use of any ECR with the LESO prior to the PCR.

vi) Ensure LEAs understand property shall be transferred to a participating agency with SC and LESO approval or returned to DLA Disp Svcs when deemed no longer needed or serviceable.

vii) Conduct State-level (internal) PCRs of participating LEAs to ensure property accountability, program compliance and program eligibility utilizing a PCR checklist provided by the LESO, or equivalent (for uniformity purposes).

(1) Ensure a State-level (internal) PCR of at least 8% of LEAs with program inventory is completed annually (3% of which will be focused on program participants with no controlled property). Results of the State-level (internal) PCR will be kept on-file with the State. Documentation shall be provided to the LESO for each LEA that received a State-level PCR.

(2) The State-level (internal) PCR will include, at minimum:

(a) A review of the dually-signed SPO, ensuring it is uploaded to the property accounting system.

(b) A review of the LEA application package to confirm authenticity and eligibility of the LEA.

(c) An inventory of property selected for review at each LEA.

(d) A review of each selected LEA files for any of the following which may include turn-in/transfer DD Form 1348-1A, ECR, small arm documentation, FLIPL documents, exception to policy letters, approved cannibalization requests, or other pertinent documentation as required.

(3) Request that the LESO restrict, suspend or terminate an LEA based on findings during State-level internal PCR or due to non-compliance with terms of the MOA between the Federal Government and the State/U.S. Territory and/or this SPO, DLA Instruction/Manual or any statute or regulation regarding the program.

(4) Notify the LESO and initiate an investigation into any questionable activity or action involving property issued to a LEA that comes to the attention of the State and is otherwise within the authority of the Governor/State to investigate. Upon conclusion of any such investigation, take appropriate action and/or make appropriate recommendations on restriction, suspension, or termination of the State/LEA to the LESO. The SC may suspend or terminate a State/LEA participation in the program at any time for non-compliance.

12) ANNUAL PHYSICAL INVENTORY Each State/LEA is required to conduct an annual physical inventory of all property on the active property book and provide certification in the property accounting system. DEMIL "A" and "Q6" property records will not be closed during the annual physical inventory period.
In the State of Oklahoma, the annual physical inventory and certification in the property accounting system process starts on July 1st and must be completed by August 10th. The State shall:

a) Provide training to LEAs to properly conduct the annual physical inventory and complete the certification of property in the property accounting system.

b) Ensure an approved and current SPO is uploaded in the property accounting system for each LEA.

c) Validate the annual physical inventory certifications submitted by LEAs.

d) Adhere to annual physical inventory certification requirements as identified by the LESO. Physical inventories and certification statements will be maintained on file IAW the DLA records schedule.

e) Annually certify property is utilized and is within allocation limits IAW the MOA between the Federal Government and the State/U.S. Territory and this SPO .

f) Recommend suspension of program participants who fail to complete or submit the certified annual physical inventory.

13) REPORTING LOST, STOLEN, OR DESTROYED (LSD) PROPERTY Any property identified as LSD on a LEA current inventory, shall be reported to the State/LESO. A FLIPL (aka the DD Form 200) shall be submitted to the State/LESO for LSD property. Program participants agree to cooperate with investigations into LSD property by any federal, state, or local investigative body and, when requested, assist with recovery of LSD property.

a) LSD controlled property shall be reported to the State/LESO within 24-hours. Program participants may be required to provide their SC/SPOC additional documentation which may include (but is not limited to):
1) Comprehensive police report, 2) NCIC report/entry, and 3) Contact information for the Civilian Governing Body (CGB) over the LEA involved, to include: Title, Name, Email, and mailing address.

b) LSD property with a DEMIL code of "A" and "Q6" shall be reported to the State/LESO within 7-days.

14) RESTRICTION, SUSPENSION OR TERMINATION Program participants are required to abide by the terms and conditions of the MOA between the Federal Government and the State/U.S. Territory and this SPO in order to maintain active program participation status. If a State/LEA fails to comply with any term or condition of the MOA, SPO, DLA Instruction or Manual, federal statute or regulation, the State/LEA may be suspended, terminated, or placed on restricted status. Restriction, suspension, or termination notifications will be in writing and will identify remedial measures required for reinstatement (if applicable). *Suspension*-A specified period in which an entire State/LEA is prohibited from requesting or receiving additional property through the program. Additional requirements may be implemented, to include the State/LEA requirement to return specifically identified controlled property. Suspensions will be for a minimum of 60-days. *Termination*-The removal of a State/LEA from program participation. The terminated State/LEA shall transfer or turn-in all controlled property previously received through the program at the expense of the State/LEA involved. *Restricted Status*-A specified period in which a State/LEA is restricted from receiving an item or commodity due to isolated issues with the identified item or commodity. Restricted status may also include restricting a State/LEA from all controlled property.

a) State termination-The SC/SPOC will coordinate with LESO to identify a realistic timeframe to complete the transfer or turn-in of all property. The LESO retains final authority to determine timeframe requirements.

b) LEA termination-The SC/SPOC will coordinate with LESO to identify a realistic timeframe to complete the transfer or turn-in of all property. The LESO retains final authority to determine timeframe requirements.

c) In the event of a termination, the State/LEA will make every attempt to transfer the property of the terminated State/LEA to an authorized State/LEA, as applicable, prior to requesting a turn-in of the property to DLA Disp Svcs. In cases that require a repossession or turn-in of property, the State/LEA will bear all expenses related to the repossession, turn-in or transfer of property to DLA Disp Svcs.

d) The State shall:

i) Suspend LEAs for a minimum of 60-days in all situations relating to the suspected or actual abuse of property or requirements and/or repeated non-compliance related to the terms and conditions of this SPO. Suspension may lead to termination. The State shall also issue corrective action guidance to the LEA with suspense dates to rectify issues and/or discrepancies that caused the restriction, suspension, or termination. The State shall require the LEA to submit results on completed police investigations and/or reports on LSD property to include the LEA CAP. The LESO retains final discretion on reinstatement requests. Reinstatement to full participation from a restriction, suspension or termination is not automatic.

ii) Initiate corrective action to rectify suspensions or terminations of the LEA for non-compliance to the terms and conditions of the program. The State shall also make contact (until resolved) with suspended LEAs to ensure corrective actions are rectified within required timeframes provided by the LESO.

iii) Require the LEA to complete and submit results on completed police investigations or reports regarding LSD property. The State will submit all documentation to LESO upon receipt.

iv) Provide documentation to LESO when actionable items are rectified for the State/LEA.

v) Request that the LESO suspend or terminate an LEA based upon their findings during State-level internal PCR or due to non-compliance with any term of this SPO, DLA Instruction/Manual or any statute or regulation regarding the program.

vi) Notify the LESO and initiate an investigation into any questionable activity or action involving property issued to an LEA that comes to the attention of the State and is otherwise within the authority of the Governor/State to investigate. Upon conclusion of any such investigation, take appropriate action and/or make appropriate recommendations on restriction, suspension, or termination of the LEA to the LESO. The SC may revoke or terminate concurrence for LEA participation in the program at any time.

vii) Provide written request to the LESO for reinstatement of an LEA for full participation status at the conclusion of a restriction or suspension period. Written verification shall be provided that the SC/SPOC has validated the LEA CAP.

15) RECORDS MANAGEMENT The LESO, SC/SPOC, and LEAs participating in the program will maintain program records IAW the DLA records schedule. Records for property acquired through the program have retention controls based on the DEMIL code. Property records will be filed, retained, and destroyed IAW DLA records schedule. Records may include, but are not limited to: DD Form 1348-1A for transfers, turn-ins, requisitions, Bureau of Alcohol, Tobacco, Firearms and Explosives (BATFE) Forms 5 and 10.

16) TRADE SECURITY CONTROL (TSC) and COMPLIANCE WITH EXPORT CONTROL REGULATIONS Items transferred to program participants, including DEMIL A and Q (with an Integrity Code of 6) property, may be subject to export control restrictions. Program participants shall comply with U.S. export control laws and regulations if they contemplate further transfers of any property. Once title transfers, LEAs should consult with the Department of State (DoS) and Department of Commerce (DoC) export control regulators about the type of export controls that may apply to items, regardless of DEMIL code. Program participants may request a formal Commodity Classification from the DoC, Bureau of Industry and Security (BIS), or submit a general correspondence request to the DoS, Directorate of Defense Trade Controls. Information on managing exports of CCL items can be found at the U.S. DoC Bureau of Industry and Security website. Program participants shall notify all subsequent purchasers or transferees, in writing, of their responsibility to comply with U.S. export control laws and regulations.

17) NOTICES Any notices, communications, or correspondence related to this SPO shall be provided by email, the U.S. Postal Service (USPS), express service, or facsimile to the appropriate DLA office. The LESO may (from time to time) make unilateral modifications or amendments to the provisions of the MOA between the Federal Government and the State/U.S. Territory and/or this SPO. Notice of these changes will be provided to the State in writing. Unless the State takes immediate action to terminate the MOA between the Federal Government and the State/U.S. Territory and/or this SPO, such modifications or amendments will become binding. In such cases, reasonable opportunity will (insofar as practicable) be afforded the State/LEA to conform to changes affecting their operations.

18) ANTI-DISCRIMINATION By signing or accepting property, the State/LEA pledges agreement to comply with provisions of the national policies prohibiting discrimination: 1) On the basis of race, color, or national origin, in Title VI of the Civil Rights Act of 1964 (42 USC 2000d et seq.) as implemented by DoD regulations 32 CR Part 195, 2)On the basis of age, in the Age Discrimination Act of 1975 (42 USC 6101, et seq) as implemented by Department of Health and Human Services regulations in 45 CFR Part 90 and 3) On the basis of handicap, in Section 504 of the Rehabilitation Act of 1973, P.L. 93-112, as amended by the Rehabilitation Act Amendments of 1974, P.L. 93-516 (29 USC 794), as implemented by Department of Justice (DoJ) regulations in 28 CFR Part 41 and DoD regulations at 32 CFR Part 56. These elements are the minimum essential ingredients for establishment of a satisfactory business agreement between the State and the DoD.

19) INDEMNIFICATION CLAUSE The State/LEA is required to maintain adequate liability insurance to cover damages or injuries to persons or property relating to the use of property issued under the program. Self-insurance by the State/LEA is considered acceptable. The USG assumes no liability for damages or injuries to any person(s) or property arising from the use of property issued under the program. It is recognized that State and local law generally limit or preclude the State/LEA from agreeing to open ended indemnity provisions. However, to the extent permitted by State and local laws, the State/LEA shall indemnify and hold the USG harmless from any and all actions, claims, debts, demands, judgments, liabilities, cost, and attorney's fees arising out of, claimed on account of, or in any manner predicated upon loss of, or damage to property and injuries, illness or disabilities to, or death of any and all persons whatsoever, including members of the general public, or to the property of any legal or political entity including States, local and interstate bodies, in any manner caused by or contributed to by the State/LEA, its agents, servants, employees, or any person subject to its control while the property is in the possession of, used by, or subject to the control of the State/LEA, its agents, servants, or employees after the property has been removed from USG control.

20) TERMINATION This SPO may be terminated by either party, provided the other party receives a thirty (30) day notice (in writing) or as otherwise stipulated by Public Law. The undersigned SC hereby agrees to comply with

all provisions set forth herein and acknowledges that any violation of the terms and conditions of this SPO may be grounds for immediate termination and possible legal consequences, to include pursuit of criminal prosecution if so warranted.

21) AGREEMENT OF PARTIES The parties below agree to enter this agreement as of the last date below:

Governor-appointed SC/SPOC, State of: Oklahoma

_John Fletcher_____
Print Name of SC/SPOC

SPOC (State Point of Contact) _____
Print Title of signer

_____
Signature of SC/SPOC

_____
Date (MM/DD/YYYY)

STATE OF OKLAHOMA

COUNTY OF OKLAHOMA

SUBSCRIBED & SWORN ON: _____

BY: __John Fletcher_____

NOTARY PUBLIC: _____

COMMISSION EXPIRES: _____

CHICKASHA POLICE DEPARTMENT
Law Enforcement Agency (LEA)

_____
Print name of Chief Law Enforcement Official (CLEO) (or designee)

_____
Print Title of signer

_____
Signature of Chief Law Enforcement Official (CLEO) (or designee)

_____
Date (MM/DD/YYYY)

STATE OF OKLAHOMA

COUNTY OF: _____

SUBSCRIBED & SWORN ON: _____

BY: _____

NOTARY PUBLIC: _____

COMMISSION EXPIRES: _____

Month Date, Year

SUBJECT: Notification to Civilian Governing Body and Local Community

On May 25, 2022, Presidential Executive Order (EO) 14074 "Advancing Effective, Accountable Policing and Criminal Justice Practices to Enhance Public Trust and Public Safety" was signed.

In accordance with EO 14074 (Section 12), State, Tribal, local, and Territorial Law Enforcement agencies (LEAs) must:

1) Notify their Civilian Governing Body (CGB) *(i.e., City Council, County Government or other local governing body)* of its intent to request property from Federal sources (to include Federal funds or grants.

2) Notify the Local Community of its request for property transfers, purchases from Federal funds, agencies or subcontractors (including existing transfer contracts or grants).

The XXXXX Sheriff/Police Department may request the below controlled property items from the Law Enforcement Support Office (LESO), or other Federal source:

Controlled Property Description

Pursuant to EO 14074 (Section 12), this memo fulfills the requirement to notify the Civilian Governing Body (CGB) and Local Community of my agency's intent to request the controlled property items identified in the list above.

Chief Law Enforcement Official Name
Title,
Law Enforcement Agency Name

INSTRUCTIONS FOR TEMPLATE LETTER

This template is for use by agencies to comply with Executive Order 14074 (Section 12), dated May 25, 2022. Agency may edit/add verbiage, place on agency letterhead, etc., as appropriate.

1. Place template on your agency letterhead.
2. Date the document.
3. Federal Support Requested via: Identify the items that may be requested from Federal Source (i.e., General Services Administration (GSA), Law Enforcement Support Office (LESO), Grant submission, etc.).
4. Controlled Property Description: Identify the type of item that may be requested. Please add or delete items that your agency may request, according to your agency's needs. Please ensure this list is all encompassing and not too restrictive, i.e., when requesting an armored vehicle, do not request a specific model (in case that model is not available). Required specificity of this list is ultimately determined by your agency's CBG. An example list of controlled property descriptions is listed below as an example:

Controlled Property Description	Controlled Property Description	Controlled Property Description
This list is for example only, additional types of items may be available.		
AIRCRAFT ACCESSORIES, COMPONENTS, MISC	FACEMASK	RANGE FINDER, LASER
AIRCRAFT REPAIR PARTS/COMPONENTS	FLASHLIGHTS	RANGE FINDER-TARGET DESIGNATOR, LASER
AIRCRAFT, FIXED WING	FLOODLIGHT	RED DOT SIGHT
AIRCRAFT, ROTORY WING	FORWARD LOOKING INFRARED IMAGING SYSTEM	RIFLESCOPE
ALL TERRAIN VEHICLE (ATV)	GENERATOR SET	SCANNER, X-RAY, BAGGAGE
AMMUNITION CONTAINER	GLOBAL POSITIONING SATELLITE (GPS)	SEARCHLIGHT
AMPLIFIER	HEAVY EQUIPMENT/VEHICLES	SHIELD, BALLISTIC
ANALYZER, HAZARDOUS MATERIAL IDENTIFICATION	INSULATION BLANKET	SHIPPING CONTAINER
ANTENNA	LANDING SEARCHLIGHT	SIGHT, BORE, OPTICAL
ARMORED VEHICLE	LIFE PRESERVER, VEST	SIGHT, HOLOGRAPHIC
BALLISTIC BLANKET	MAGNIFIER	SIGHT, INFINITY
BARRIER, VEHICLE ARRESTING, PORTABLE	MARKER, IDENTIFICATION	SIGHT, REFLEX
BINOCULAR	MARKSMANSHIP TRAINER	SMALL ARMS STORAGE RACKS
BLANKETS	MEDICAL/FIRST AID SUPPLIES	SPOTTING INSTRUMENT, OPTICAL
BREATHING APPARATUS	MISC SMALL ARMS PARTS	TARGET, TRAINING, MOBILE
CAMERA SYSTEM	MISCELLANEOUS COMMUNICATION EQUIPMENT	TELESCOPE
COMPASS	MULTIMEDIA PROJECTION SET	TENTS/PORTABLE SHELTERS
COMPUTER SYSTEM	NAVIGATION SET, SATELLITE SIGNALS	THERMAL CAMERA
CONTAINER, AMMUNITION	NIGHT VISION DEVICE	THERMAL CAMERA ACCESSORIES
CONTAINER, K-9 TRANSPORT	NIGHT VISION GOGGLE	TRAINING AID/SIMULATORS
CONVERSION KIT, RIFLE	NON-ARMORED HMMWV	TRAINING AIDES/DEVICES
COVERALLS	OFFICE EQUIPMENT	TRANSLATION DEVICE
DECONTAMINATION DEVICES	OFFICE SUPPLIES	TRUCK, CARGO
DECONTAMINATION SYSTEM	PORTABLE RADIO	TRUCK, TANK
DEEP WATER FORDING KIT	PREFAB & PORTABLE BUILDINGS	VEHICLE REPAIR PARTS/COMPONENTS
DETECTOR, GAS	PROTECTIVE EYEWEAR	WARM WEATHER CLOTHING/SHOES
DIVER'S SUIT	PUBLIC ADDRESS SET	SMALL ARMS PARTS/ACCESSORIES
EXPLOSIVE ORDINANCE DISPOSAL ROBOT	RADIOS	SMALL ARMS

5. Add appropriate Name, Signature.
6. An attachment of items that may be requested can be attached, as needed.
7. Ensure the letter is translated into the appropriate languages for your community when posted to your LEA website or prior to the public notice.
8. Submit this letter to your CGB to allow reasonable opportunity to review, typically 30 days.
9. Post this letter for public notice, recommended on your LEA website.

NOTE: If an item is not on this CBG notice or public notice you may not requisition it from the LESO program. Note this only applies to controlled items, non-controlled items do not require CGB notice and Community notification however it may be in the interest of the LEA to incorporate the non-controlled non-military specific items. If an item is not on this list and you decide you would like to acquire a new updated CGB and public notice will be required prior to requisition.

Law Enforcement Support Office (LESO)
Instructions for completing an Application for Participation/Authorized Screeners Letter

SECTION 1

(**Indicates a required field)*

The LESO will only accept applications from the State Coordinators office. DO NOT send directly to the LESO.

ORI number:** Enter the law enforcement Originating Agency Identifier (ORI) number assigned to the agency. If the agency does not have a law enforcement ORI, please contact your State Coordinator. Law enforcement ORI numbers consist of 9 alpha/numeric characters (Ex. ME0010100). Positions 1 and 2 are alphabetical characters representing the state or country the agency is located (Ex. ***ME0010100).

Note-The LESO Program coordinates with DLA Office of Inspector General (OIG) for ORI number validation against the Federal Bureau of Investigation's National Crime Information Center (NCIC) data base.

***Agency name:** Enter official agency name.

***Physical address:** Enter physical address of your agency.

***NCIC P.O. box or other address:** If National Crime and Information Center (NCIC) has a P.O. box listed for the agency address, or address is different than agency physical address (i.e. the NCIC terminal location) enter it in this section.

***City:** Enter City name.

***State:** Enter two-digit state abbreviation.

***Zip code:** Enter zip code of agency address.

***Email address:** Enter agency email address (Email address is used for automated system notifications).

***Phone number:** Enter main agency phone number.

***Full-time & part-time officers:** An agency must have at least one full-time law enforcement officer to enroll in the LESO Program. Only full-time and part-time officers may receive property. Non-compensated officers are not authorized to receive property.

Full-time: The number of full-time compensated officers with arrest and apprehension authority employed when at full strength/manning.

Part-time: The number of part-time compensated officers with arrest and apprehension authority employed when at full strength/manning.

Note-Both boxes MUST be filled in. If agency does not have part-time officers, enter "N/A", "0" or line through the empty space (Ex. --------). This is ONLY acceptable in the part-time officer field.

***Reutilization, Transfer and Donation (RTD) Screener:** Individual(s) authorized to search for equipment (on behalf of the agency) that may become available to law enforcement via the LESO Program. RTD Screeners must be employees of the agency. Contractors may not conduct screening on behalf of the agency. Agencies must identify at least 1 RTD Screener.

***Official Title/Rank:** Ex. Chief, Sheriff, Investigator, Captain, Armorer, Pilot.

***First name:** Enter full first name as shown on a valid US driver's license. Initials are not acceptable.

***Last name:** Enter last name as shown on a valid US driver's license.

***Email:** Enter the RTD Screener's email address.

***Phone number:** Enter the RTD Screener's phone number.

Point of Contact (POC): Enter "Aircraft", "Small Arms" or "Vehicle" for the RTD Screener if designated as such by the agency. Enter "N/A" if not applicable.

Note-Identify the number of RTD Screeners deemed necessary by the agency. Fill in empty fields with "XXXXX", black-out the field, or line through. If more than 4 RTD Screeners are necessary, submit an additional application form marked with "1 of 2", "2 of 2", etc. in the lower or upper right corner.

SECTION 2: Reserved for Law Enforcement Agency Use Only

(**Indicates a required field)*

The LESO will only accept applications from the State Coordinators office. DO NOT send directly to the LESO.

***Certification statement:** This box must be checked prior to submission to the State Coordinator. Checking this box certifies your agency:

1) meets the definition of a law enforcement agency as defined by the LESO Program,
2) information contained on the application form is accurate,
3) agrees to update the application form if changes are made to the Chief Law Enforcement Officer (CLEO), agency address or RTD Screeners,
4) agency is abiding by the current version of the LESO approved State Plan of Operation (SPO),
5) agency has a signed copy of the SPO on file

Note-Agencies not meeting the definition of "Law Enforcement Agency" (as indicated on the application form) are unauthorized to participate in the LESO Program. Unauthorized participants include non-governmental entities such as private railroad police, private security, private academies, correctional departments/prisons, security police at private schools or colleges. Fire departments, by definition, are ineligible to participate.

***Select the statement that best applies to the individual signing Section #2 (CHECK ONLY ONE BOX):**

1. The CLEO is signing the application.

OR

2. An "Acting CLEO", "Interim CLEO" or other person with signature authority granted to their official position at the agency is signing the application.
****If this box is checked, please provide appropriate documentation (i.e., current department policy, agency memorandum or other suitable documentation that provides such signature authority to the individual holding that official position).*

***Title:** Provide official title (ex. Sheriff, Chief).

***Printed name:** Enter full name as indicated on a valid US driver's license. Initials are not acceptable.

***Signature:** Applications must be signed by the CLEO. Digital signatures are acceptable.

***Date:** Enter date of signature. Applications must be submitted to the LESO within 30 days of both the CLEO and the State Coordinators office signatures.

SECTION 3: Reserved for State Coordinators Office Use Only

(**Indicates a required field)*

The LESO will only accept applications from the State Coordinators office. DO NOT send directly to the LESO.

***Printed name:** Enter full name as indicated on a valid US driver's license. Initials are not acceptable.

***Signature:** Applications must be signed by an authorized State Coordinator or State Point of Contact. Digital signatures are acceptable.

***Date:** Enter date of signature. Applications must be submitted to the LESO within 30 days of both the CLEO and the State Coordinators office signatures.

Version March 2022

DEFENSE LOGISTICS AGENCY
DISPOSITION SERVICES
74 WASHINGTON AVENUE NORTH
BATTLE CREEK, MICHIGAN 49037-3092

CLEAR FORM

Law Enforcement Support Office (LESO)
Application for Participation / Authorized Screeners Letter

(This form is for State/Local Law Enforcement Agencies (LEA) only)

***Indicates Required Fields**

SECTION 1:

*Agency Name: Chickasha Police Department

Originating Agency Identifier (ORI) #:(if applicable) OK0260100

*Agency Physical Address: 2001 W. Iowa Avenue

*City: Chickasha

*State: OK *Zip Code: 73018 *NCIC P.O. Box or Address (if different than above i.e., terminal location) 117 N. 4th Street, Chickasha, OK. 73018

*Phone #: (405) 222-6052 *Email: goebel.music@chickashapd.org

Note: Email is needed for automated system notifications.

Agency MUST have at least 1 full-time officer to participate in the program. Indicate the number of compensated officers with arrest and apprehension authority. Part-time field MUST be filled in: N/A, 0 or - is acceptable.

*Full-time: 19 *Part-time: 2

RTD Screener - RTD Screeners MUST be employed by the aforementioned LEA. Individuals identified below may request access to act as an authorized "RTD Screener" on behalf of this Law Enforcement Agency. Agency MUST have at least 1 RTD Screener. Enter "XXXXX" or "N/A" into all screener fields not used.

	*Official Title / Rank	*First Name	*Last Name	*Email	*Phone Number	POC (Aircraft/Small Arms/Vehicle)
*#1	Interim Chief of Police	Goebel	Music, Jr.	goebel.music@chickashapd.org	(405) 222-6070	Vehicles/Small Arms
#2	Sergeant	Chad	King	chad.king@chickashapd.org	(405) 222-6050	Vehicles/Small Arms
#3	Sergeant	Eric	Burkhart	eric.burkhart@chickashapd.org	(405) 222-6050	Vehicles/Small Arms
#4						
#5						
#6						
#7						

SECTION 2:

RESERVED FOR LAW ENFORCEMENT AGENCY USE ONLY

Law Enforcement Agency/Activity - The LESO Program defines this as a Governmental agency/activity whose primary function is the enforcement of applicable Federal, State and Local laws and whose compensated Law Enforcement officers have the powers of arrest and apprehension.

* ☑ I certify that my agency meets the definition of a "Law Enforcement Agency/Activity" as described above. I certify that all information contained in this application is valid and accurate. I understand that I must provide my State Coordinator an application to update my agency participant information if the following information changes: a) Chief Law Enforcement Official (CLEO) changes, b) Agency physical address changes, c) RTD Screener additions/deletions, d) that my agency is abiding by the current version of the LESO approved State Plan of Operation (SPO) and e) that my agency has a signed copy of the SPO on file.

*(Check only one):

☑ I am signing this document as the CLEO of this law enforcement agency.

☐ In my official position or as Acting/Interim, I am authorized to sign documents on behalf of the CLEO for this agency. If checked, please provide appropriate documentation (i.e., current department policy, agency memorandum or other suitable documentation that provides such signature authority to the individual holding that official position).

By signing this application, I certify that my Agency will comply with U.S. Code 2576a for all controlled property, which states; With the authorization of the relevant local governing body or authority, that my agency has adopted publically available protocols for the appropriate use of controlled property, the supervision of such use, and the evaluation of the effectiveness of such use, including auditing and accountability policies; and that it provides annual training to relevant personnel on the maintenance, sustainment, and appropriate use of controlled property. I certify under penalty of perjury that the foregoing is true and correct. Making a false statement may result in judicial actions or prosecution under 18 USC § 1001.

Interim Chief of Police	Goebel	Music, Jr.
***TITLE**	***PRINTED FIRST NAME:**	***PRINTED LAST NAME:**
goebel.music@chickashapd.org		
***EMAIL**	***SIGNATURE**	***DATE**

SECTION 3:

RESERVED FOR STATE COORDINATORS OFFICE USE ONLY

By signing this application, I certify that as the State Coordinator/State Point of Contact, I have determined that: a) the agency meets the definition of a "Law Enforcement Agency/Activity" as described in Section 2, b) that all information contained in this application is valid and accurate, c) that the LEA is abiding by the current version of the LESO approved State Plan of Operation (SPO) and d) that the LEA has a signed copy of the SPO on file.

***PRINTED NAME FIRST & LAST**	***SIGNATURE**	***DATE**

SECTION 4:

RESERVED FOR LESO USE ONLY

NOTICE FOR DLA DISPOSITION SERVICES PERSONNEL: Regulatory guidance outlining Screener Identification and Authorization must be accomplished in accordance with DOD 4160.21-M, Volume 3, Enclosure 5, Section 3 (k). In accordance with the aforementioned reference, the LESO Program authorizes the individuals identified in Section 1 of this form to screen excess property at your facilities as authorized participants in the LESO Program. This authorized screener letter supersedes all previously issued screener letters for this Law Enforcement Agency/Activity and is valid only on or after the date signed by authorized LESO signatory. Only two individuals authorized to screen per visit; however, additional personnel may assist receiving material previously screened and approved for transfer.

*This agency is authorized to screen items via the LESO Program under authorized Agency DODAAC:

*LESO Authorized Signatory: *Screener letter is valid one year from this date:

***Signature**

Note: After one year from the LESO signatory date, the screener letter is no longer valid. LEAs may request a new screener letter through their SC/SPOC.

LESO Notes:

City of
CHICKASHA

Meeting Type: Council Agenda 12-5-2022

Meeting Date: 12/5/2022

Department: Community Development **Agenda Item No. 6.c.**

AGENDA ITEM: Public Hearing - to discuss and consider the Use on Review for 602 S 22nd Street for Applicant Micah McCarty

I. BACKGROUND/DESCRIPTION:

II. RECOMMENDED ACTION:
Hold Public Hearing.

III. FISCAL INFORMATION -

IV. FUND INFORMATION:

Dept. Director: Rachel Bernish, Community Development Director	Fund	Account	Amount
	(To)		
	FUND	ACCOUNT	AMOUNT
Meeting Date: December 5, 2022	(From)		

V. ATTACHMENTS:

City of
CHICKASHA

Meeting Type: Council Agenda 12-5-2022

Meeting Date: 12/5/2022

Department: Community Development **Agenda Item No. 6.d.**

AGENDA ITEM: Discussion, consideration, and possible action to approve Ordinance 2022-27 - Use on Review Permit for 602 22nd Street for applicant Micah McCarty

I. BACKGROUND/DESCRIPTION:

Micah McCarty is requesting to violate 4 ordinances in this use on review
54-77(2)(b)- This accessory building will be over 600 square feet
54-77(3)(a)- This accessory building will not be on a lot with a residential structure
54-77(3)(d)- This accessory building will be in front of the main structure when the structure is built
54-77(5)(b)- this accessory building will not meet the facade requirements.

The Planning commission recommends this for approval.

If a home is not built on this property, there would be just an accessory building located on a residential lot.

This lot is unique due to its size, and there have been no complaints received regarding this item.

II. RECOMMENDED ACTION:

Staff recommends approving Ordinance 2022-27 as presented.

III. FISCAL INFORMATION -

IV. FUND INFORMATION:

Dept. Director: Rachel Bernish, Community Development Director	Fund	Account	Amount
	(To)		
	FUND	ACCOUNT	AMOUNT
Meeting Date:	(From)		

December 5, 2022		

V. ATTACHMENTS:

1. 20221118161015600
2. Ord. 2022- 27 Use on Review 602 s 22nd Street

Due On:_____

Planning Commission Meeting Date:_____

City of
Chickasha

117 North 4th street
Chickasha, OK 73018

Community Development

CITY OF CHICKASHA
APPICATION FOR USE ON REVIEW

DATE: 7/1/22

1. Applicant(s) Name: Micah McCarty

   Address: 2125 w Dakota Ave Chickasha OK 73018

   Phone: 405-613-4824

2. Legal Description of subject property: S 8.5 acres of (E ½, SE ¼, SE ¼) of section 29, township 7 north, range 7 W of Indian meridian,Grady County, Oklahoma aka 602 s 22nd st, Chickasha Ok 73018

3. Address of subject property: 602 s 22nd stChickasha OK 73018

4. Present zoning of subject property: R1

5. Physical Characteristics of Subject Property:

   Frontage on Street:_____

   Lot Depth:_____

   Drawing Attached: x YES _____ NO

6. Proposed Use for the Property: Residential single family home eventually (approximately two years from now). For now we simply want to build a storage building on the existing slab and access the property from s 22nd st as the address describes. See drawing.

7. Public Utilities Which Serve the Property:
   Street, Surface Material: No current street access

   City Water: X YES _____ NO, then list source of water_____
   City Sanitary Sewer: _____ YES X NO, then list provider no current sewer access nor is access available at proposed home location

8. Number of Off-Street Parking Spaces: n/a
   Surface Material of Parking Spaces:_____

9. Abstractors Certified Property Owners List Provided: _____ YES x NO

10. Owner of Record: Micah McCarty

Address: 2125 w Dakota Ave Chickasha OK 73018 Phone Number:

11. $330.00 Application Fee Paid:_____YES_____NO

ALL INFORMATION ON THIS FORM MUST BE COMPLETED IN ORDER TO PROCESS YOUR REQUEST

Applicant(s) Signature: Date: 9/1/22

117 North 4th Street, Chickasha, Oklahoma 73018 (405)222-6010 Fax No. (405)574-1015

E-mail: rachel.bernish@chickasha.org

CITY OF
CHICKASHA
OKLAHOMA

To: Property Owners within 300 feet of 602 S 22nd Street

Legal Description: The South 8.5 Acres of the East Half of Southwest Quarter of Southwest Quarter (E1/2 SE1/4 SW1/4) of Section 29, Township 7 North, Range 7 West of the Indian Meridian, Grady County, Oklahoma

Location: 602 S 22nd Street

From: Community Development

Date: October 17, 2022

Applicant: Micah McCarty

Re: Use On Review for 602 S 22nd Street to allow oversized accessory building, an accessory building on a lot separate from the main structure, an accessory building in front of the main structure after constructed, and an accessory building which will not meet the façade requirements.

Public hearings have been scheduled regarding the request for a use on review for 602 S 22nd Street.

If you wish to voice your support or protest regarding the above application you should attend the Planning Commission meeting on **November 8, 2022 at 4:00 PM** in the City Council Chambers Rm. 210 at City Hall, 117 North 4th Street, Chickasha, Oklahoma

and the **City Council** meeting on **December 5, 2022 at 6:30 PM** in the City Council Chambers Room. 210 at City Hall, 117 North 4th Street, Chickasha, Oklahoma. Written comments, if received prior to the meetings, may be entered into the record.

If you have any questions regarding this matter, please contact me at 405-222-6010 or email me at **rachel.bernish@chickasha.org**

Sincerely

Rachel Bernish
Community Development Director
Emergency Manager
405-222-6010
Rachel.bernish@chickasha.org
117 N 4th Street
Chickasha, OK 73018

SPECIAL CERTIFICATE

STATE OF OKLAHOMA }
} SS:
COUNTY OF GRADY }

The Undersigned, lawfully bonded abstracters in and for said County and State, hereby certify that the foregoing attached sheets contain a true and complete list of all property owners owning property with in a 300 foot radius of the following described premises, to wit:

The South 8.5 acres of the East Half of Southeast Quarter of Southwest Quarter (E½ SE¼ SW¼) of Section 29, Township 7 North, Range 7 West of the Indian Meridian, Grady County, Oklahoma,

as such list appears in the records of the County Treasurer of Grady County, Oklahoma.

Dated at Chickasha, Oklahoma, this 19th day of September, A.D. 2022 at 7:59 A.M.

COCHRAN ABSTRACT COMPANY

By _____.
Asst. Mgr.

ORDER #67304

Compiled by

COCHRAN ABSTRACT COMPANY
INCORPORATED

BONDED ABSTRACTERS

Keegan V Doke, Manager

Title

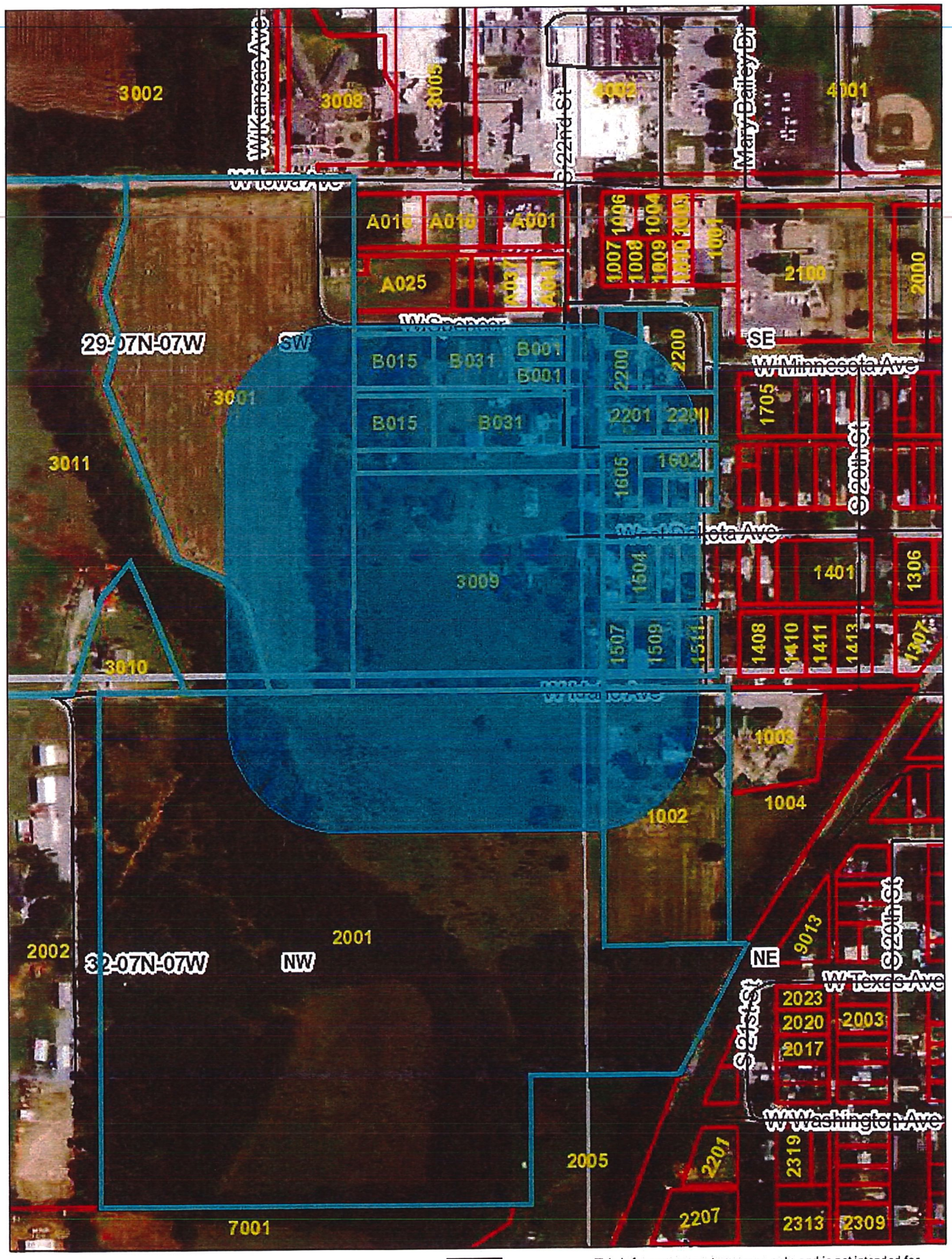

0 0.045 0.09 0.18 mi

This is for assessment purposes only, and is not intended for use in making conveyances or for preparing legal descriptions

Copyrighted by the GRADY COUNTY ASSESSOR
Chickasha, Oklahoma, 2021

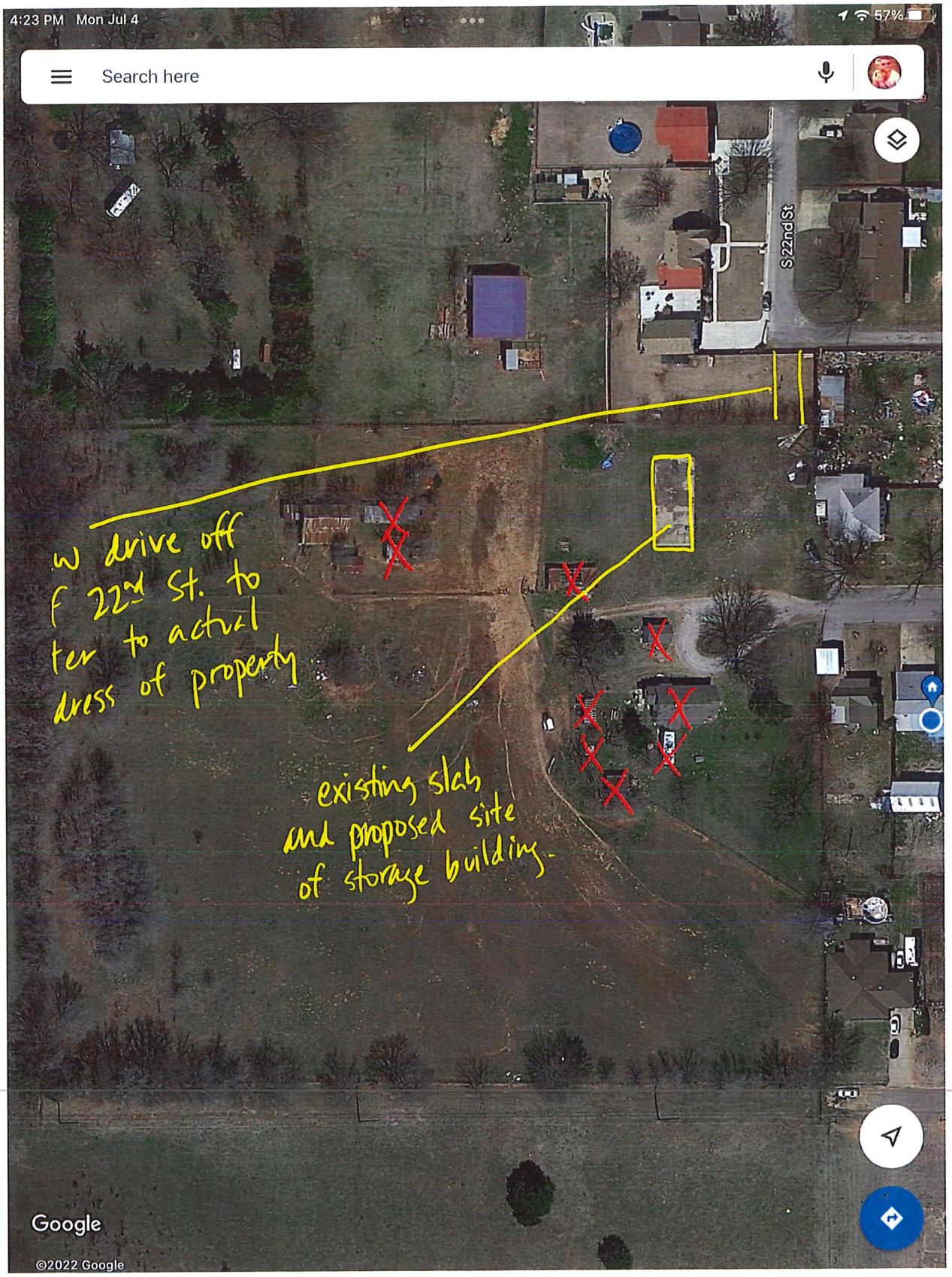
4:23 PM Mon Jul 4
57%
Search here
S 22nd St
w drive off
f 22nd St. to
ter to actual
dress of property
existing slab
and proposed site
of storage building.
Google
©2022 Google

Legal Publication
(Published in The Express-Star October 20th, 2022)
From: Community Development
Applicant: Micah McCarty
Re: Use on Review for 602 S 22nd Street for an Oversized building, Building location, Use Changes
Location: 602 S 22nd Street
Legal: The South 8.5 Acers of the East Half of the Southwest Quarter of the Southwest Quarter (E1/2SE1/4SW1/4) of Section 29, Township 7 North, Range 7 West of the Indian Meridian, Grady County, Oklahoma.
When: Planning Commission November 8, 2022 at 4 pm in the City of Chickasha City Council Chambers, City Council Hearing will be December 5, 2022 at 6:30 PM in the City Council Chambers.
Please contact community development with questions or concerns. 405-222-6010; rachel.bernish@chickasha.org

Proof of Publication

~~In the District Court of Grady County, State of Oklahoma~~

Case No: 602 S 22nd Street

Affidavit of Publication

State of Oklahoma, County of Grady, ss:
I, the undersigned publisher, editor or Authorized Agent of the Chickasha Daily Express, do solemnly swear that the attached advertisement was published in said paper as follows:

1st Publication October 20, 2022

That said newspaper is Weekly, in the city of Chickasha, Grady County, Oklahoma, a Weekly newspaper qualified to publish legal notices, advertisements and publications as provided in Section 106 of Title 25, Oklahoma Statutes 1971, as amended, and complies with all other requirements of the laws of Oklahoma with reference to legal publications.

That said Notice, a true copy of which is attached hereto, was published in the regular edition of said newspaper during the period and time of publications and not in a supplement, on the above noted dates.

Signature

Subscribed and sworn before me on this 20th day of October 2022.

Tina Anderson

My commission expires July 10, 2024. Notary Public Commission # 20008340

Cost of Publication $ 17.85

Ad # 00509738 **Acct # 23151928** **Copies: 1**

PAY TO

The Express Star
PO Drawer E
Chickasha, OK 73023

A copy of this affidavit of publication was delivered to the Office of the Grady County Court Clerk on October 20, 2022.
Please include the case number on your check.

TINA ANDERSON NOTARY # 20008340 EXP. 07/10/24 PUBLIC STATE OF OKLAHOMA

ORDINANCE NO. 2022-27

AN ORDINANCE OF THE MAYOR AND COUNCIL OF THE CITY OF CHICKASHA, GRADY COUNTY, STATE OF OKLAHOMA, APPROVING THE USE ON REVIEW FOR AN OVERSIZED BUILDING, AN ACCESSORY BUILDING ON A LOT SEPARATE FROM THE MAIN STRUCTURE, ACCESSORY BUILDING IN FRONT OF THE MAIN STRUCTURE, AND AN ACCESSORY BUILDING WHICH WILL NOT MEET THE FAÇADE REQUIRMENTS.

WHEREAS, a use permitted on review was requested and the Planning Commission held a public hearing and voted unanimously to forward a recommendation for approval to the City Council;

BE IT ORDAINED BY THE MAYOR AND COUNCIL OF THE CITY OF CHICKASHA, STATE OF OKLAHOMA:

SECTION 1. **Use on Review Permit for 602 22nd Street** This permit will allow for an oversized building, an accessory building on a lot separate from the main structure, accessory building in front of the main structure once the main structure is built, an accessory structure that will not meet the façade requirements.

SECTION 2. **Severability.** If any section, subsection, sentence, clause, phase, or portion of this ordinance is, for any reason, held invalid or unconstitutional by any court of competent jurisdiction, such portion shall be deemed a separate, distinct, and independent provision, and such holding shall not affect the remaining portions of this ordinance.

SECTION 3. **Effective Date**. This Ordinance shall be in full force and effect 30 days from and after its passage, approval, and publication.

Adopted and approved this 5th day of December, 2022.

_____
Chris Mosley, Mayor

ATTESTED:

_____
Susan M. McDaniel, City Clerk

(SEAL)

City of
CHICKASHA

Meeting Type: Council Agenda 12-5-2022

Meeting Date: 12/5/2022

Department: Public Works **Agenda Item No. 6.e.**

AGENDA ITEM: Discussion, consideration, and possible action to authorize the purchase of a Petersen TL-3 Lightning Loader and a Freightliner Chassis for an amount not to exceed $233,895.13 on State Contract SW035T.

I. BACKGROUND/DESCRIPTION:

Current grappler truck has been unreliable for some time now and repairs have been very costly. A new grappler truck is needed to meet the demands of limb collections.

II. RECOMMENDED ACTION:

Authorize the purchase of a Petersen TL-3 Lightning Loader and a Freightliner Chassis for an amount not to exceed $233,895.13.

III. FISCAL INFORMATION -

IV. FUND INFORMATION:

Dept. Director: Jim Crosby, Public Works Director	Fund	Account	Amount
	(To)		
	FUND	ACCOUNT	AMOUNT
Meeting Date: November 21, 2022	(From) 52-552-6000-269		$233,895.13

V. ATTACHMENTS:

1. Grappler Truck Proposal

CITY OF CHICKASHA PURCHASE REQUEST

☐ open ☒ rec

PO # _____

VENDOR # _____

DATE: 11/4/2022

DEPT: SANATATION

DELIVER TO: PUBLIC WORKS

VENDORS	Vendor # 1 ☐	Vendor # 2 ☐	Vendor # 3 ☐
NAME	J&R EQUIPMENT		
ADDRESS	8800 SW 8TH ST		
CITY	OKC		

BUDGET BALANCE	ITEM-DESCRIPTION	QTY	TOTAL PRICE VENDOR # 1	TOTAL PRICE VENDOR # 2	TOTAL PRICE VENDOR # 3
	GRAPPLE BODY		$ 133,103.96		
		TOTAL	$ 133,103.96	$ 0.00	$ 0.00
		CASH DISCOUNT	( )	( )	( )
		TOTAL GROSS PRICE	$ 133,103.96	$ 0.00	$ 0.00
		TOTAL FREIGHT			
		TOTAL	$ 133,103.96	$ 0.00	$ 0.00

DISBURSEMENT
FUND: _____
DEPT: _____
ITEM: _____

COMMENTS: q

ALL EXPENDITURES OF MORE THAN $500 MUST BE SUPPORTED BY VERBAL OR WRITTEN QUOTATIONS, MORE THAN $1,000 MUST BE SUPPORTED BY FORMAL WRITTEN QUOTATIONS AND MORE THAN $3,500 MUST BE DONE THROUGH A FORMAL BID PROCESS.
QUOTATIONS MUST BE FROM AT LEAST THREE (3) RESPONSIBLE BIDDERS AND MUST BE ATTACHED.

QUOTATIONS TAKEN BY:(Printed Name/Signature)_____

CIRCLE ONE			APPROVAL
BID ONLY	RUSH	CONTRACT ONLY	DEPARTMENT HEAD
			DIRECTOR OF FINANCE
QUOTATIONS ONLY	EMERGENCY PURCHASE		CITY MANAGER

10/14/2013

CITY OF CHICKASHA PURCHASE REQUEST

DATE: 11/4/2022

DEPT: SANATATION

DELIVER TO: PUBLIC WORKS

☐ open ☒ rec

PO # _____

VENDOR # _____

VENDORS	Vendor # 1 ☐	Vendor # 2 ☐	Vendor # 3 ☐
NAME	PREMIER TRUCK GROUP		
ADDRESS	5301 I-40		
CITY	OKC		

BUDGET BALANCE	ITEM-DESCRIPTION	QTY	TOTAL PRICE VENDOR # 1	TOTAL PRICE VENDOR # 2	TOTAL PRICE VENDOR # 3
	FRIEGHTLINER CHASSIS		$ 100,791.17		
		TOTAL	$ 100,791.17	$ 0.00	$ 0.00
		CASH DISCOUNT	( )	( )	( )
		TOTAL GROSS PRICE	$ 100,791.17	$ 0.00	$ 0.00
		TOTAL FREIGHT			
		TOTAL	$ 100,791.17	$ 0.00	$ 0.00

DISBURSEMENT
FUND: _____
DEPT: _____
ITEM: _____

COMMENTS: q

ALL EXPENDITURES OF MORE THAN $500 MUST BE SUPPORTED BY VERBAL OR WRITTEN QUOTATIONS, MORE THAN $1,000 MUST BE SUPPORTED BY FORMAL WRITTEN QUOTATIONS AND MORE THAN $3,500 MUST BE DONE THROUGH A FORMAL BID PROCESS.
QUOTATIONS MUST BE FROM AT LEAST THREE (3) RESPONSIBLE BIDDERS AND MUST BE ATTACHED.

QUOTATIONS TAKEN BY:(Printed Name/Signature)_____

CIRCLE ONE			APPROVAL
BID ONLY	RUSH	CONTRACT ONLY	DEPARTMENT HEAD
			DIRECTOR OF FINANCE
QUOTATIONS ONLY	EMERGENCY PURCHASE		CITY MANAGER

10/14/2013

J&R EQUIPMENT

November 4, 2022

City of Chickasha
Attn. Jim Crosby

Jim,

Please see pricing below:

Current List Price	$117,789.32	Petersen TL-3 Lightning Loader - Based on SW0197 OK State Contract
Freight	$6000.00	
Allied Cost for 2023 Price Increases	$9,314.64	NOTE: If we are not charged with any price increases, we will not charge you and this will be reflected in the final invoice to the City.
Total for TL-3 Grapple Body	$133,103.96	Separate PO# to J & R Equipment
Freightliner Chassis	$100,791.17	Separate PO# to Premier Truck Group
TOTAL	**$233,895.13**	

Delivery of Chassis is 3rd Quarter 2023

Petersen Delivery is 60-90 days after receipt of chassis at factory.

Thank You,

Randy Holtz
918-640-7474

LIGHTNING LOADER®

PETERSEN INDUSTRIES

WE BUILD LEGENDS.

TL-3 LIGHTNING LOADER®

PETERSENIND.COM | 800.930.LOAD (5623)

TL-3 4 page brochure_FINAL_march 2018.indd 1 3/22/18 9:34 AM

TL-3 LIGHTNING LOADER®

American born. American made. Efficient, dependable one-man operations for secure solid waste removal. Revolutionizing grapple trucks since 1957 and home to the original, industry-defining Lightning Loader®.

LIGHTNING LOADER®
AN AMERICAN LEGEND

The Lightning Loader® is the most envied, most desired, and most imitated grapple truck in the industry. We manufacture 95% of each unit in-house to guarantee quality. Each Lightning Loader® is built to provide maximum strength, durability, and reliability, so you can get the job done fast and free of headaches.

BUILT BY THE BEST

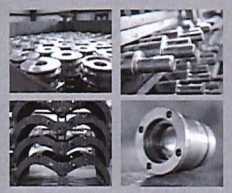

At Petersen Industries, we're serious about being "Made in America." We've lived and breathed knucklebooms for over 60 years, in Lake Wales, Florida. When it was time to build a new facility, we moved down the street – not overseas.

From buckets to cylinders, we manufacture and install 95% of all components in-house. We're proud of our product and the people who build it. Your Petersen Industries Lightning Loader® is built by highly trained American workers, with quality American parts.

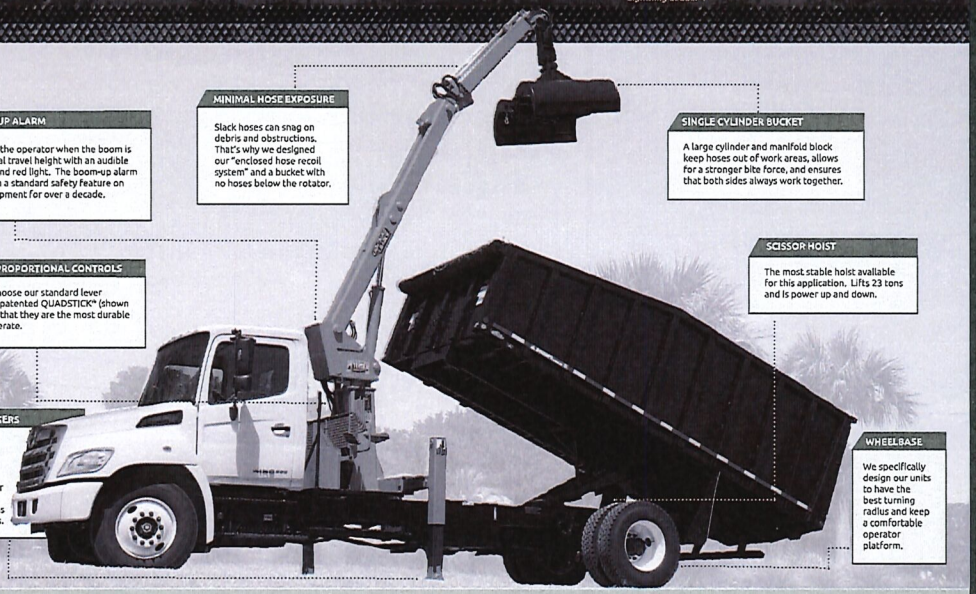

BOOM-UP ALARM

Notifies the operator when the boom is over legal travel height with an audible buzzer and red light. The boom-up alarm has been a standard safety feature on our equipment for over a decade.

MINIMAL HOSE EXPOSURE

Slack hoses can snag on debris and obstructions. That's why we designed our "enclosed hose recoil system" and a bucket with no hoses below the rotator.

SINGLE CYLINDER BUCKET

A large cylinder and manifold block keep hoses out of work areas, allows for a stronger bite force, and ensures that both sides always work together.

GREASELESS PROPORTIONAL CONTROLS

Whether you choose our standard lever controls or our patented QUADSTICK® (shown on back); know that they are the most durable & easiest to operate.

SCISSOR HOIST

The most stable hoist available for this application. Lifts 23 tons and is power up and down.

H-STYLE OUTRIGGERS

Horizontal and vertical outriggers act independently of each other. Allows the operator to custom place around obstructions and traffic patterns.

WHEELBASE

We specifically design our units to have the best turning radius and keep a comfortable operator platform.

HEAD & PEDESTAL ASSEMBLY

Our Head design is unique for the industry. We started with the kingpost and rotator design 50 years ago and have stuck with it because of: ***reliability, ease of maintenance, and simplicity.***

HEAD

This heavy duty piece of American ingenuity is stress relieved prior to installation.

LOCK-COLLAR

Simply and effectively prevents vertical movement of the king post.

TORQUE ARM

The torque arm allows the gearbox to float laterally, which helps to reduce stresses to the pedestal caused from dynamic forces from boom rotation. Without a torque arm the pedestal would be subjected to higher levels of stress caused by the rotational forces from sudden starts or stops from boom rotation.

EASY MAINTENANCE

We use Nylatron bushings in the bearing housing and a sealed planetary gearbox to reduce maintenance time.

PETERSEN INDUSTRIES | 4000 SR 60 WEST | LAKE WALES, FLORIDA 33859

1.800.930.LOAD (5623) | PETERSENIND.COM

TL-3 4 page brochure_FINAL_march 2018.indd 2-3 3/20/18 9:34 AM

SPECIFICATIONS & TECHNICAL DATA

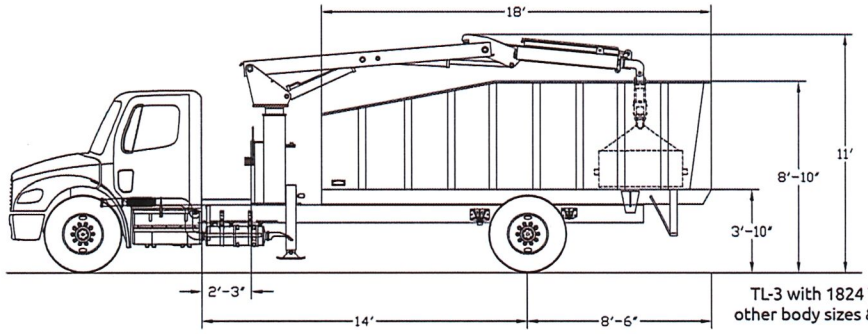

TL-3 with 1824 TBS body shown, other body sizes & options available.

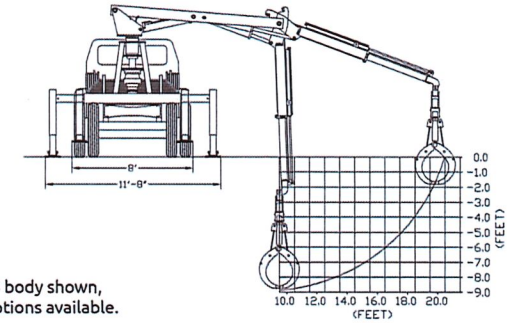

SYSTEM DESCRIPTION:

The model TL-3 Lightning Loader® is a grapple loader mounted to a chassis from behind the cab, equipped with Petersen's standard trash bucket at the end of the boom. The loader operates from a fixed platform located behind the chassis cab. CNG Capable.

LIFT CAPACITY

Radius	Load Capacity
10 ft. radius	7,100 lbs.
16 ft. radius	4,400 lbs.
20 ft. radius	3,200 lbs.

Note: Weight of attachment not subtracted from listed lifting capacities. Trash bucket weight 1,000 lbs. Capacities shown do not exceed 85% vehicle tipping moment (outriggers engaged and on firm, level ground.)

GENERAL SPECIFICATIONS

Reach	20 ft. 7 inches
○ Main Boom & Tip Boom	16 ft. 7 inches
○ Tip Extension	4 ft.
Tare Weight (empty)	23,000 lbs.
Outrigger Span	11 ft. 8 in.
Dump Body Hoist Capacity	23 tons

RECOMMENDED CHASSIS (MINIMUM)

Body Style	Conventional Cab
Cab-to-Axle Dimension	168", 186", 192"
Front Axle Rating	12,000 lbs. Minimum
Rear Axle Rating	21,000 lbs. Minimum
GVW Rating	33,000 lbs. Minimum
Frame	1,800,000 RBM
Frame Thickness	11/32" Minimum
Engine	230 HP Diesel
Transmission	Automatic
Electrical	Remote engine & transmission connectors

*Always contact Petersen Industries for specific chassis requirements

CONTROL OPTIONS:

Dual manual controls for outriggers and loader on both sides of the truck for accessibility and visibility come standard on this model. QUADSTICK® mechanically linked dual joystick controls (left) are also an available option on the TL-3 and stationary top mount controls (right).

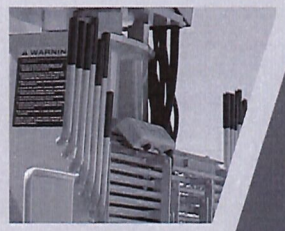

SCAN TO LEARN MORE

4000 SR 60 West
Lake Wales, FL 33859
1.800.930.LOAD (5623)

LIGHTNING LOADER®
PETERSEN INDUSTRIES

PETERSENIND.COM

Contact Us Today To Learn More

Quote

Petersen Industries, Inc.
4000 SR 60 W.
Lake Wales, FL. 33859
P: (863) 676-1493
F: (863) 676-6844

Quote No	Quote Date	Page
20222165	9/28/2022	1

Bill To
J & R EQUIPMENT L.L.C.
8800 SW 8TH STREET
OKLAHOMA CITY, OK 73128
US

Ship to
J & R EQUIPMENT L.L.C.
8800 SW 8TH STREET
OKLAHOMA CITY, OK
US

END USER: Chikasha, City of (OK)

Customer No	Slspsn	Payment terms
1451	Austin Bruner	Net 30

Loc	PPD/COL	Ship via	Ship Date
LW		DRIVE AWAY	

Delivery Date: 60-90 days ARC

Qty Ordered	UOM	Item No		
1.00	EA	LOADER AS CONFIGURED BELOW		
Feature/Kit Components- LOADER				
1.00	EA	0.TL3 MODEL TL3 BASE LOADER		1.00
1.00	EA	03.11SAI HEAVY DUTY SWING MOTOR		1.00
1.00	EA	03.12 STD HT PED STANDARD HEIGHT PEDESTAL		1.00
1.00	EA	01.11MQCA QUADSTICK MECH CONTROLS (UPGRADE for TL)		1.00
1.00	EA	01.24 GRATING HEAT SHIELD (FOR DUAL CONTROLS ONLY)		1.00
1.00	EA	10.16 HDHI HDHI OUTRIGGER STROBE		1.00
1.00	EA	07.10SB60 STANDARD BUCKET 60"		1.00
1.00	EA	10.04 BUWL BOOM-UP WARNING LIGHT/AUDIBLE ALARM		1.00
1.00	EA	12.05 HG HOSE GUARDS- HEAD & VALVE BANK		1.00
1.00	ST	10.97 WL WORK LIGHTS - (SET OF 2) (1 EACH SIDE OF BOOM)		1.00
1.00	EA	12.36 HD HD CONTROL BOX THROTTLE ENGINE KILL & HORN		1.00
1.00	EA	12.02 TP TANDEM PUMP IN LIEU OF SINGLE 18 GMP		1.00
1.00	EA	11.02 LBPIO LOADER SINGLE COLOR PI ORANGE		1.00
1.00	EA	8.0 DUMP BODY AS CONFIGURED BELOW		
Feature/Kit Components- 8.0 DUMP BODY				
1.00	EA	8.29 2030-HDX MODEL HDX-2030 HARDOX BODY 1/8" SIDES, 3/16" FLOOR		1.00
1.00	EA	8.36 PISWLCD PI SELF-WINDING LOAD COVERING DEVICE (ADD-ON)		1.00

Quote

Petersen Industries, Inc.
4000 SR 60 W.
Lake Wales, FL. 33859
P: (863) 676-1493
F: (863) 676-6844

Quote No	Quote Date	Page
20222165	9/30/2022	2

Bill To
J & R EQUIPMENT L.L.C.
8800 SW 8TH STREET
OKLAHOMA CITY, OK 73128
US

Ship to
J & R EQUIPMENT L.L.C.
8800 SW 8TH STREET
OKLAHOMA CITY, OK
US

END USER: Chikasha, City of (OK)

Customer No	Slspsn	Payment terms
1451	Austin Bruner	Net 30

Loc	PPD/COL	Ship via	Ship Date
LW		DRIVE AWAY	

Delivery Date: 60-90 ARC

Qty Ordered	UOM	Item No	
1.00	EA	8.72 OPRD SINGLE PIECE REAR DOOR (REPLACES STND BARN DOORS)	1.00
1.00	EA	8.47 WL-BW WIRE LOOM FOR BODY WIRING	1.00
1.00	EA	10.09 LED LED TYPE BODY LIGHTS, 15 EA.	1.00
1.00	EA	10.10 LED FLASH AMBER LED FLASHERS IN REAR CORNER POST	1.00
1.00	EA	8.77ANSI ANSI Z245 PACKAGE	1.00
1.00	EA	8.76 RCMTL REAR CAMERA MOUNTED IN REAR MARKER LIGHT-TV-550	1.00
1.00	EA	11.02B BODY COLOR: BLACK	1.00

OK State Contract SW0197 Pricing - $114393.56

Allied Cost for 2023/2024 Price Increase - $12,710.40

Freight - $6000.00

TOTAL QUOTE = $133,103.96

Chassis Quote will be provided seperately.

Randy Holtz/918-640-7474

Signature Date

THE QUOTE TOTAL MAY NOT REFLECT MISCELLANEOUS CHARGES, FREIGHT OR SALES TAX

(C)2002 Exact Software North America

Proposal for City of Chickasha

Company Name: **Penske Commercial Vehicles, US, LLC / ATC Freightliner Group LLC, dba: Premier Truck Group**

Bidder Information: **Premier Truck Group / FEI: # 46-2758677**

Contact Person: **Jane Kirton, Account Manager @ 405-945-3577**

Physical Address: **5301 I-40 West Oklahoma City, OK 73128**

Mailing Address: **PO Box 272430 Oklahoma City, OK 73137**

State Contract SW035T

2024 Freightliner M2-106 $ 96,295.17

See attached Specs dated: September 6, 2022 / Petersen Body

5 Years or 150,000 Cummins Engine and After Treatment $ 2,500.00

5 Years unlimited miles Allison Transmission / refuse application $ 1,076.00

5 years unlimited towing $ 920.00

Total Price $ 100,791.17

Jane Kirton
Account Manager
Premier Truck Group Oklahoma City
5301 I-40 West
Oklahoma City, OK 73128-1211
Direct: 405.945.3577
Cell: 405.973.8792
jkirton@premiertruck.com

Prepared for:
Jim
McClain
CHICKASHA CITY OF
117 N 4TH ST

CHICKASHA, OK 73018
Phone: 405-222-6020

Prepared by:
Jane Kirton
PREMIER TRUCK GROUP OF
OKLAHOMA CITY
5301 I-40 WEST
OKLAHOMA CITY, OK 73128
Phone: 405-945-3577

SPECIFICATION PROPOSAL

Data Code	Description	Weight Front	Weight Rear
Price Level			
PRL-27M	M2 PRL-27M (EFF:MY24 ORDERS)		
Data Version			
DRL-010	SPECPRO21 DATA RELEASE VER 010		
Vehicle Configuration			
001-172	M2 106 CONVENTIONAL CHASSIS	5,709	3,450
004-224	2024 MODEL YEAR SPECIFIED		
002-004	SET BACK AXLE - TRUCK		
019-002	STRAIGHT TRUCK PROVISION		
003-001	LH PRIMARY STEERING LOCATION		
General Service			
AA1-002	TRUCK CONFIGURATION		
AA6-002	DOMICILED, USA (EXCLUDING CALIFORNIA AND CARB OPT-IN STATES)		
A85-001	REFUSE SERVICE		
A84-1GM	GOVERNMENT BUSINESS SEGMENT		
AA4-003	DRY BULK COMMODITY		
AA5-002	TERRAIN/DUTY: 100% (ALL) OF THE TIME, IN TRANSIT, IS SPENT ON PAVED ROADS		
AB1-008	MAXIMUM 8% EXPECTED GRADE		
AB5-001	SMOOTH CONCRETE OR ASPHALT PAVEMENT - MOST SEVERE IN-TRANSIT (BETWEEN SITES) ROAD SURFACE		
995-091	MEDIUM TRUCK WARRANTY		
A66-99D	EXPECTED FRONT AXLE(S) LOAD : 14000.0 lbs		
A68-99D	EXPECTED REAR DRIVE AXLE(S) LOAD : 23000.0 lbs		
A63-99D	EXPECTED GROSS VEHICLE WEIGHT CAPACITY : 37000.0 lbs		

Prepared for:
Jim
McClain
CHICKASHA CITY OF
117 N 4TH ST

CHICKASHA, OK 73018
Phone: 405-222-6020

Prepared by:
Jane Kirton
PREMIER TRUCK GROUP OF
OKLAHOMA CITY
5301 I-40 WEST
OKLAHOMA CITY, OK 73128
Phone: 405-945-3577

Data Code	Description	Weight Front	Weight Rear
Truck Service			
AA3-005	FLATBED/PLATFORM/STAKE BODY		
AF3-169	PETERSEN INDUSTRIES		
AF7-99D	EXPECTED BODY/PAYLOAD CG HEIGHT ABOVE FRAME "XX" INCHES : 32.0 in		
Engine			
101-3EY	CUM L9 300 HP @ 2200 RPM, 2200 GOV RPM, 860 LB-FT @ 1200 RPM, REFUSE	640	30
Electronic Parameters			
79A-075	75 MPH ROAD SPEED LIMIT		
79B-000	CRUISE CONTROL SPEED LIMIT SAME AS ROAD SPEED LIMIT		
79G-107	10 MINUTE IDLE SHUTDOWN - CONTINUOUS OVERRIDE WITH CLUTCH AND SERVICE BRAKE		
79M-001	PTO MODE BRAKE OVERRIDE - SERVICE BRAKE APPLIED		
79S-001	PTO MODE CANCEL VEHICLE SPEED - 5 MPH		
79U-007	PTO GOVERNOR RAMP RATE - 250 RPM PER SECOND		
79W-001	ONE REMOTE PTO SPEED		
79X-003	PTO SPEED 1 SETTING - 800 RPM		
80G-002	PTO MINIMUM RPM - 700		
80J-002	REGEN INHIBIT SPEED THRESHOLD - 5 MPH		
Engine Equipment			
99C-021	2010 EPA/CARB/GHG21 CONFIGURATION		
99D-010	NO 2008 CARB EMISSION CERTIFICATION		
13E-001	STANDARD OIL PAN		
105-001	ENGINE MOUNTED OIL CHECK AND FILL		
014-099	SIDE OF HOOD AIR INTAKE WITH FIREWALL MOUNTED DONALDSON AIR CLEANER		
124-1D7	DR 12V 160 AMP 28-SI QUADRAMOUNT PAD ALTERNATOR WITH REMOTE BATTERY VOLT SENSE		
292-235	(2) DTNA GENUINE, FLOODED STARTING, MIN 2000CCA, 370RC, THREADED STUD BATTERIES	10	
290-017	BATTERY BOX FRAME MOUNTED		
281-001	STANDARD BATTERY JUMPERS		
282-001	SINGLE BATTERY BOX FRAME MOUNTED LH SIDE UNDER CAB		
291-017	WIRE GROUND RETURN FOR BATTERY CABLES WITH ADDITIONAL FRAME GROUND RETURN		

Prepared for:
Jim
McClain
CHICKASHA CITY OF
117 N 4TH ST

CHICKASHA, OK 73018
Phone: 405-222-6020

Prepared by:
Jane Kirton
PREMIER TRUCK GROUP OF
OKLAHOMA CITY
5301 I-40 WEST
OKLAHOMA CITY, OK 73128
Phone: 405-945-3577

Data Code	Description	Weight Front	Weight Rear
289-001	NON-POLISHED BATTERY BOX COVER		
87P-001	CAB AUXILIARY POWER CABLE	5	
293-058	POSITIVE LOAD DISCONNECT WITH CAB MOUNTED CONTROL SWITCH MOUNTED OUTBOARD DRIVER SEAT	2	
295-003	POSITIVE AND NEGATIVE POSTS FOR JUMPSTART CHASSIS MOUNTED LH BACK OF CAB	4	
107-032	CUMMINS TURBOCHARGED 18.7 CFM AIR COMPRESSOR WITH INTERNAL SAFETY VALVE		
108-002	STANDARD MECHANICAL AIR COMPRESSOR GOVERNOR		
131-013	AIR COMPRESSOR DISCHARGE LINE		
152-040	ELECTRONIC ENGINE INTEGRAL WARNING AND DERATE PROTECTION SYSTEM		
128-076	CUMMINS ENGINE INTEGRAL BRAKE WITH VARIABLE GEOMETRY TURBO ON/OFF	20	
016-1C3	RH OUTBOARD UNDER STEP MOUNTED HORIZONTAL AFTERTREATMENT SYSTEM ASSEMBLY WITH RH HORIZONTAL TAILPIPE		
28F-002	ENGINE AFTERTREATMENT DEVICE, AUTOMATIC OVER THE ROAD REGENERATION AND DASH MOUNTED REGENERATION REQUEST SWITCH		
239-001	STANDARD EXHAUST SYSTEM LENGTH		
237-052	RH STANDARD HORIZONTAL TAILPIPE		
23U-001	6 GALLON DIESEL EXHAUST FLUID TANK		
30N-003	100 PERCENT DIESEL EXHAUST FLUID FILL		
43X-002	LH MEDIUM DUTY STANDARD DIESEL EXHAUST FLUID TANK LOCATION		
23Y-001	STANDARD DIESEL EXHAUST FLUID PUMP MOUNTING		
43Y-001	STANDARD DIESEL EXHAUST FLUID TANK CAP		
273-060	HIGH SPEED AIR POWERED ON/OFF ENGINE FAN CLUTCH		
276-002	AUTOMATIC FAN CONTROL WITH DASH SWITCH AND INDICATOR LIGHT, NON ENGINE MOUNTED		
110-003	CUMMINS SPIN ON FUEL FILTER		
118-008	COMBINATION FULL FLOW/BYPASS OIL FILTER		
266-101	900 SQUARE INCH ALUMINUM RADIATOR	15	
103-039	ANTIFREEZE TO -34F, OAT (NITRITE AND SILICATE FREE) EXTENDED LIFE COOLANT		
171-007	GATES BLUE STRIPE COOLANT HOSES OR EQUIVALENT		

Prepared for:
Jim
McClain
CHICKASHA CITY OF
117 N 4TH ST

CHICKASHA, OK 73018
Phone: 405-222-6020

Prepared by:
Jane Kirton
PREMIER TRUCK GROUP OF
OKLAHOMA CITY
5301 I-40 WEST
OKLAHOMA CITY, OK 73128
Phone: 405-945-3577

Data Code	Description	Weight Front	Weight Rear
172-001	CONSTANT TENSION HOSE CLAMPS FOR COOLANT HOSES		
270-016	RADIATOR DRAIN VALVE		
168-002	LOWER RADIATOR GUARD		
138-011	PHILLIPS-TEMRO 1000 WATT/115 VOLT BLOCK HEATER	4	
140-053	BLACK PLASTIC ENGINE HEATER RECEPTACLE MOUNTED UNDER LH DOOR		
134-001	ALUMINUM FLYWHEEL HOUSING		
132-004	ELECTRIC GRID AIR INTAKE WARMER		
155-058	DELCO 12V 38MT HD STARTER WITH INTEGRATED MAGNETIC SWITCH		
Transmission			
342-584	ALLISON 3500 RDS AUTOMATIC TRANSMISSION WITH PTO PROVISION	200	60
Transmission Equipment			
343-325	ALLISON VOCATIONAL PACKAGE 180 - AVAILABLE ON 3000/4000 PRODUCT FAMILIES WITH VOCATIONAL MODEL RDS		
84B-013	ALLISON VOCATIONAL RATING FOR REFUSE APPLICATIONS AVAILABLE WITH ALL PRODUCT FAMILIES		
84C-022	PRIMARY MODE GEARS, LOWEST GEAR 1, START GEAR 1, HIGHEST GEAR 5, AVAILABLE FOR 3000/4000 PRODUCT FAMILIES ONLY		
84D-022	SECONDARY MODE GEARS, LOWEST GEAR 1, START GEAR 1, HIGHEST GEAR 5, AVAILABLE FOR 3000/4000 PRODUCT FAMILIES ONLY		
84E-000	PRIMARY SHIFT SCHEDULE RECOMMENDED BY DTNA AND ALLISON, THIS DEFINED BY ENGINE AND VOCATIONAL USAGE		
84F-000	SECONDARY SHIFT SCHEDULE RECOMMENDED BY DTNA AND ALLISON, THIS DEFINED BY ENGINE AND VOCATIONAL USAGE		
84G-000	PRIMARY SHIFT SPEED RECOMMENDED BY DTNA AND ALLISON, THIS DEFINED BY ENGINE AND VOCATIONAL USAGE		
84H-000	SECONDARY SHIFT SPEED RECOMMENDED BY DTNA AND ALLISON, THIS DEFINED BY ENGINE AND VOCATIONAL USAGE		
84J-000	ENGINE BRAKE RANGE PRESELECT RECOMMENDED BY DTNA AND ALLISON, THIS DEFINED BY ENGINE AND VOCATIONAL USAGE		

Prepared for:
Jim
McClain
CHICKASHA CITY OF
117 N 4TH ST

CHICKASHA, OK 73018
Phone: 405-222-6020

Prepared by:
Jane Kirton
PREMIER TRUCK GROUP OF
OKLAHOMA CITY
5301 I-40 WEST
OKLAHOMA CITY, OK 73128
Phone: 405-945-3577

Data Code	Description	Weight Front	Weight Rear
84K-000	ENGINE BRAKE RANGE ALTERNATE PRESELECT RECOMMENDED BY DTNA AND ALLISON, THIS DEFINED BY ENGINE AND VOCATIONAL USAGE		
84N-200	FUEL SENSE 2.0 DISABLED - PERFORMANCE - TABLE BASED		
84U-000	DRIVER SWITCH INPUT - DEFAULT - NO SWITCHES		
353-022	VEHICLE INTERFACE WIRING CONNECTOR WITHOUT BLUNT CUTS, AT BACK OF CAB		
34C-001	ELECTRONIC TRANSMISSION CUSTOMER ACCESS CONNECTOR FIREWALL MOUNTED		
362-823	CUSTOMER INSTALLED CHELSEA 280 SERIES PTO		
363-001	PTO MOUNTING, LH SIDE OF MAIN TRANSMISSION ALLISON		
341-018	MAGNETIC PLUGS, ENGINE DRAIN, TRANSMISSION DRAIN, AXLE(S) FILL AND DRAIN		
345-003	PUSH BUTTON ELECTRONIC SHIFT CONTROL, DASH MOUNTED		
97G-004	TRANSMISSION PROGNOSTICS - ENABLED 2013		
370-015	WATER TO OIL TRANSMISSION COOLER, IN RADIATOR END TANK		
346-003	TRANSMISSION OIL CHECK AND FILL WITH ELECTRONIC OIL LEVEL CHECK		
35T-001	SYNTHETIC TRANSMISSION FLUID (TES-295 COMPLIANT)		
Front Axle and Equipment			
400-1A8	DETROIT DA-F-14.7-3 14,700# FF1 71.5 KPI/3.74 DROP SINGLE FRONT AXLE	10	
402-049	MERITOR 16.5X5 Q+ CAST SPIDER CAM FRONT BRAKES, DOUBLE ANCHOR, FABRICATED SHOES		
403-002	NON-ASBESTOS FRONT BRAKE LINING		
419-023	CONMET CAST IRON FRONT BRAKE DRUMS		
427-001	FRONT BRAKE DUST SHIELDS	5	
409-006	FRONT OIL SEALS		
408-001	VENTED FRONT HUB CAPS WITH WINDOW, CENTER AND SIDE PLUGS - OIL		
416-022	STANDARD SPINDLE NUTS FOR ALL AXLES		
405-002	MERITOR AUTOMATIC FRONT SLACK ADJUSTERS		
536-012	TRW TAS-85 POWER STEERING	40	

Prepared for:
Jim
McClain
CHICKASHA CITY OF
117 N 4TH ST

CHICKASHA, OK 73018
Phone: 405-222-6020

Prepared by:
Jane Kirton
PREMIER TRUCK GROUP OF
OKLAHOMA CITY
5301 I-40 WEST
OKLAHOMA CITY, OK 73128
Phone: 405-945-3577

Data Code	Description	Weight Front	Weight Rear
539-003	POWER STEERING PUMP		
534-015	2 QUART SEE THROUGH POWER STEERING RESERVOIR		
533-001	OIL/AIR POWER STEERING COOLER	5	
40T-002	CURRENT AVAILABLE SYNTHETIC 75W-90 FRONT AXLE LUBE		
Front Suspension			
620-010	14,600# TAPERLEAF FRONT SUSPENSION	170	
619-005	MAINTENANCE FREE RUBBER BUSHINGS - FRONT SUSPENSION		
410-001	FRONT SHOCK ABSORBERS		
Rear Axle and Equipment			
420-1GK	DETROIT DA-RS-23.0-4 23,000# R-SERIES SINGLE REAR AXLE		30
421-391	3.91 REAR AXLE RATIO		
424-001	IRON REAR AXLE CARRIER WITH STANDARD AXLE HOUSING		
386-073	MXL 17T MERITOR EXTENDED LUBE MAIN DRIVELINE WITH HALF ROUND YOKES	40	40
423-020	MERITOR 16.5X7 Q+ CAST SPIDER CAM REAR BRAKES, DOUBLE ANCHOR, FABRICATED SHOES		
433-002	NON-ASBESTOS REAR BRAKE LINING		
434-012	BRAKE CAMS AND CHAMBERS ON REAR SIDE OF DRIVE AXLE(S)		
451-023	CONMET CAST IRON REAR BRAKE DRUMS		
425-002	REAR BRAKE DUST SHIELDS		5
440-006	REAR OIL SEALS		
426-100	WABCO TRISTOP D LONGSTROKE 1-DRIVE AXLE SPRING PARKING CHAMBERS		
428-002	MERITOR AUTOMATIC REAR SLACK ADJUSTERS		
41T-002	CURRENT AVAILABLE SYNTHETIC 75W-90 REAR AXLE LUBE		
Rear Suspension			
622-001	23,000# FLAT LEAF SPRING REAR SUSPENSION WITH RADIUS ROD		60
621-001	SPRING SUSPENSION - NO AXLE SPACERS		
431-001	STANDARD AXLE SEATS IN AXLE CLAMP GROUP		
623-005	FORE/AFT CONTROL RODS		
Brake System			

Prepared for:
Jim
McClain
CHICKASHA CITY OF
117 N 4TH ST

CHICKASHA, OK 73018
Phone: 405-222-6020

Prepared by:
Jane Kirton
PREMIER TRUCK GROUP OF
OKLAHOMA CITY
5301 I-40 WEST
OKLAHOMA CITY, OK 73128
Phone: 405-945-3577

Data Code	Description	Weight Front	Weight Rear
018-002	AIR BRAKE PACKAGE		
490-100	WABCO 4S/4M ABS		
871-001	REINFORCED NYLON, FABRIC BRAID AND WIRE BRAID CHASSIS AIR LINES		
904-001	FIBER BRAID PARKING BRAKE HOSE		
412-001	STANDARD BRAKE SYSTEM VALVES		
46D-002	STANDARD AIR SYSTEM PRESSURE PROTECTION SYSTEM		
413-002	STD U.S. FRONT BRAKE VALVE		
432-003	RELAY VALVE WITH 5-8 PSI CRACK PRESSURE, NO REAR PROPORTIONING VALVE		
480-088	WABCO SYSTEM SAVER HP WITH INTEGRAL AIR GOVERNOR AND HEATER		
479-015	AIR DRYER FRAME MOUNTED		
460-001	STEEL AIR BRAKE RESERVOIRS		
477-008	BW DV-2 AUTO DRAIN VALVE WITH HEATER - WET TANK		
Trailer Connections			
296-010	PRIMARY CONNECTOR/RECEPTACLE WIRED FOR SEPARATE STOP/TURN, ABS CENTER PIN POWERED THROUGH IGNITION		
297-001	SAE J560 7-WAY PRIMARY TRAILER CABLE RECEPTACLE MOUNTED END OF FRAME	5	5
335-004	UPGRADED CHASSIS MULTIPLEXING UNIT		
32A-002	UPGRADED BULKHEAD MULTIPLEXING UNIT		
Wheelbase & Frame			
545-698	6975MM (275 INCH) WHEELBASE		
546-101	11/32X3-1/2X10-15/16 INCH STEEL FRAME (8.73MMX277.8MM/0.344X10.94 INCH) 120KSI	480	180
547-001	1/4 INCH (6.35MM) C-CHANNEL INNER FRAME REINFORCEMENT	230	440
552-030	1600MM (63 INCH) REAR FRAME OVERHANG		
55W-006	FRAME OVERHANG RANGE: 61 INCH TO 70 INCH		
AC8-99D	CALC'D BACK OF CAB TO REAR SUSP C/L (CA) : 209.06 in		
AE8-99D	CALCULATED EFFECTIVE BACK OF CAB TO REAR SUSPENSION C/L (CA) : 206.06 in		
AE4-99D	CALC'D FRAME LENGTH - OVERALL : 376.57 in		
FSS-0LH	CALCULATED FRAME SPACE LH SIDE : 174.34 in		
FSS-0RH	CALCULATED FRAME SPACE RH SIDE : 156.81 in		

Prepared for:
Jim
McClain
CHICKASHA CITY OF
117 N 4TH ST

CHICKASHA, OK 73018
Phone: 405-222-6020

Prepared by:
Jane Kirton
PREMIER TRUCK GROUP OF
OKLAHOMA CITY
5301 I-40 WEST
OKLAHOMA CITY, OK 73128
Phone: 405-945-3577

Data Code	Description	Weight Front	Weight Rear
553-001	SQUARE END OF FRAME		
550-001	FRONT CLOSING CROSSMEMBER		
559-001	STANDARD WEIGHT ENGINE CROSSMEMBER		
561-001	STANDARD CROSSMEMBER BACK OF TRANSMISSION		
562-001	STANDARD MIDSHIP #1 CROSSMEMBER(S)		
572-001	STANDARD REARMOST CROSSMEMBER		
565-001	STANDARD SUSPENSION CROSSMEMBER		
Chassis Equipment			
556-1AP	THREE-PIECE 14 INCH PAINTED STEEL BUMPER WITH COLLAPSIBLE ENDS	30	
558-001	FRONT TOW HOOKS - FRAME MOUNTED	15	
574-001	BUMPER MOUNTING FOR SINGLE LICENSE PLATE		
586-024	FENDER AND FRONT OF HOOD MOUNTED FRONT MUDFLAPS		
551-007	GRADE 8 THREADED HEX HEADED FRAME FASTENERS		
Fuel Tanks			
204-215	50 GALLON/189 LITER SHORT RECTANGULAR ALUMINUM FUEL TANK - LH	20	
218-005	RECTANGULAR FUEL TANK(S)		
215-005	PLAIN ALUMINUM/PAINTED STEEL FUEL/HYDRAULIC TANK(S) WITH PAINTED BANDS		
212-007	FUEL TANK(S) FORWARD		
664-001	PLAIN STEP FINISH		
205-001	FUEL TANK CAP(S)		
122-1H7	DAVCO 245 FUEL/WATER SEPARATOR WITH WATER IN FUEL SENSOR	5	
216-020	EQUIFLO INBOARD FUEL SYSTEM		
202-016	HIGH TEMPERATURE REINFORCED NYLON FUEL LINE		
Tires			
093-994	MICHELIN XZE 12R22.5 16 PLY RADIAL FRONT TIRES	50	
094-1G4	MICHELIN XZE2 11R22.5 14 PLY RADIAL REAR TIRES		24
Hubs			
418-060	CONMET PRESET PLUS PREMIUM IRON FRONT HUBS		

Prepared for:
Jim
McClain
CHICKASHA CITY OF
117 N 4TH ST

CHICKASHA, OK 73018
Phone: 405-222-6020

Prepared by:
Jane Kirton
PREMIER TRUCK GROUP OF
OKLAHOMA CITY
5301 I-40 WEST
OKLAHOMA CITY, OK 73128
Phone: 405-945-3577

Data Code	Description	Weight Front	Weight Rear
450-060	CONMET PRESET PLUS PREMIUM IRON REAR HUBS		
Wheels			
502-545	MAXION WHEELS 90260 22.5X8.25 10-HUB PILOT 6.13 INSET 2-HAND HD STEEL DISC FRONT WHEELS	40	
505-545	MAXION WHEELS 90260 22.5X8.25 10-HUB PILOT 2-HAND HD STEEL DISC REAR WHEELS		80
496-011	FRONT WHEEL MOUNTING NUTS		
497-011	REAR WHEEL MOUNTING NUTS		
Cab Exterior			
829-071	106 INCH BBC FLAT ROOF ALUMINUM CONVENTIONAL CAB		
650-008	AIR CAB MOUNTING		
648-002	NONREMOVABLE BUGSCREEN MOUNTED BEHIND GRILLE		
678-001	LH AND RH GRAB HANDLES		
646-023	HOOD MOUNTED CHROMED PLASTIC GRILLE		
65X-003	CHROME HOOD MOUNTED AIR INTAKE GRILLE		
644-004	FIBERGLASS HOOD		
727-1AF	SINGLE 14 INCH ROUND HADLEY AIR HORN UNDER LH DECK	4	
726-002	DUAL ELECTRIC HORNS		
728-001	SINGLE HORN SHIELD		
575-001	REAR LICENSE PLATE MOUNT END OF FRAME		
312-038	INTEGRAL HEADLIGHT/MARKER ASSEMBLY WITH CHROME BEZEL		
302-047	LED AERODYNAMIC MARKER LIGHTS		
311-001	DAYTIME RUNNING LIGHTS		
294-001	INTEGRAL STOP/TAIL/BACKUP LIGHTS		
300-015	STANDARD FRONT TURN SIGNAL LAMPS		
744-1BC	DUAL WEST COAST BRIGHT FINISH HEATED MIRRORS WITH LH AND RH REMOTE		
797-001	DOOR MOUNTED MIRRORS		
796-001	102 INCH EQUIPMENT WIDTH		
743-204	LH AND RH 8 INCH BRIGHT FINISH CONVEX MIRRORS MOUNTED UNDER PRIMARY MIRRORS		
74A-001	RH DOWN VIEW MIRROR		
729-001	STANDARD SIDE/REAR REFLECTORS		
677-016	DUAL LEVEL CAB ENTRY STEPS ON BOTH SIDES		

Prepared for:
Jim
McClain
CHICKASHA CITY OF
117 N 4TH ST

CHICKASHA, OK 73018
Phone: 405-222-6020

Prepared by:
Jane Kirton
PREMIER TRUCK GROUP OF
OKLAHOMA CITY
5301 I-40 WEST
OKLAHOMA CITY, OK 73128
Phone: 405-945-3577

Data Code	Description	Weight Front	Weight Rear
275-061	PARK BRAKE REMINDER WARNING SYSTEM		
768-043	63X14 INCH TINTED REAR WINDOW		
661-003	TINTED DOOR GLASS LH AND RH WITH TINTED NON-OPERATING WING WINDOWS		
654-011	RH AND LH ELECTRIC POWERED WINDOWS	4	
663-013	1-PIECE SOLAR GREEN GLASS WINDSHELD		
659-019	2 GALLON WINDSHIELD WASHER RESERVOIR WITHOUT FLUID LEVEL INDICATOR, FRAME MOUNTED		
Cab Interior			
707-1AK	OPAL GRAY VINYL INTERIOR		
706-026	MOLDED PLASTIC DOOR PANEL WITHOUT VINYL INSERT WITH ALUMINUM KICKPLATE LOWER DOOR		
708-026	MOLDED PLASTIC DOOR PANEL WITHOUT VINYL INSERT WITH ALUMINUM KICKPLATE LOWER DOOR		
772-006	BLACK MATS WITH SINGLE INSULATION		
691-998	NO FORWARD ROOF MOUNTED CONSOLE	-10	
694-010	IN DASH STORAGE BIN		
742-007	(2) CUP HOLDERS LH AND RH DASH		
680-006	GRAY/CHARCOAL FLAT DASH		
860-004	SMART SWITCH EXPANSION MODULE		
720-003	5 LB. FIRE EXTINGUISHER	10	
714-001	FIRST AID KIT	2	
700-002	HEATER, DEFROSTER AND AIR CONDITIONER		
701-001	STANDARD HVAC DUCTING		
703-005	MAIN HVAC CONTROLS WITH RECIRCULATION SWITCH		
170-015	STANDARD HEATER PLUMBING		
130-041	VALEO HEAVY DUTY A/C REFRIGERANT COMPRESSOR		
702-002	BINARY CONTROL, R-134A		
739-033	STANDARD INSULATION		
285-013	SOLID-STATE CIRCUIT PROTECTION AND FUSES		
280-007	12V NEGATIVE GROUND ELECTRICAL SYSTEM		
324-011	DOME DOOR ACTIVATED LH AND RH, DUAL READING LIGHTS, FORWARD CAB ROOF		
657-001	DOOR LOCKS AND IGNITION SWITCH KEYED THE SAME		
78G-004	KEY QUANTITY OF 4		

Prepared for:
Jim
McClain
CHICKASHA CITY OF
117 N 4TH ST

CHICKASHA, OK 73018
Phone: 405-222-6020

Prepared by:
Jane Kirton
PREMIER TRUCK GROUP OF
OKLAHOMA CITY
5301 I-40 WEST
OKLAHOMA CITY, OK 73128
Phone: 405-945-3577

Data Code	Description	Weight Front	Weight Rear
655-005	LH AND RH ELECTRIC DOOR LOCKS		
284-023	(1) 12 VOLT POWER SUPPLY IN DASH		
722-028	TRIANGULAR REFLECTORS KIT WITHOUT FLARES SHIPPED LOOSE IN CAB	10	
756-338	BASIC ISRINGHAUSEN HIGH BACK AIR SUSPENSION DRIVERS SEAT WTIH MECHANICAL LUMBAR AND INTEGRATED CUSHION EXTENSION	30	
760-338	BASIC ISRINGHAUSEN HIGH BACK AIR SUSPENSION PASSENGER SEAT WTIH MECHANICAL LUMBAR AND INTEGRATED CUSHION EXTENSION	25	10
759-005	DUAL DRIVER AND PASSENGER SEAT ARMRESTS	8	
711-004	LH AND RH INTEGRAL DOOR PANEL ARMRESTS		
758-036	VINYL WITH VINYL INSERT DRIVER SEAT		
761-036	VINYL WITH VINYL INSERT PASSENGER SEAT		
763-102	HIGH VISIBILITY ORANGE SEAT BELTS		
532-002	ADJUSTABLE TILT AND TELESCOPING STEERING COLUMN	10	
540-015	4-SPOKE 18 INCH (450MM) STEERING WHEEL		
765-002	DRIVER AND PASSENGER INTERIOR SUN VISORS		
Instruments & Controls			
732-004	GRAY DRIVER INSTRUMENT PANEL		
734-004	GRAY CENTER INSTRUMENT PANEL		
87L-005	ENGINE REMOTE INTERFACE WITHOUT INTERLOCKS		
870-001	BLACK GAUGE BEZELS		
486-001	LOW AIR PRESSURE INDICATOR LIGHT AND AUDIBLE ALARM		
840-002	2 INCH PRIMARY AND SECONDARY AIR PRESSURE GAUGES		
198-003	DASH MOUNTED AIR RESTRICTION INDICATOR WITH GRADUATIONS		
721-001	97 DB BACKUP ALARM		3
149-013	ELECTRONIC CRUISE CONTROL WITH SWITCHES IN LH SWITCH PANEL		
156-007	KEY OPERATED IGNITION SWITCH AND INTEGRAL START POSITION; 4 POSITION OFF/RUN/START/ACCESSORY		
157-007	MANUAL REMOTE ENGINE STOP/START WITH PTO RE-ENGAGE		

Prepared for:
Jim
McClain
CHICKASHA CITY OF
117 N 4TH ST

CHICKASHA, OK 73018
Phone: 405-222-6020

Prepared by:
Jane Kirton
PREMIER TRUCK GROUP OF
OKLAHOMA CITY
5301 I-40 WEST
OKLAHOMA CITY, OK 73128
Phone: 405-945-3577

	Data Code	Description	Weight Front	Weight Rear
	811-042	ICU3S, 132X48 DISPLAY WITH DIAGNOSTICS, 28 LED WARNING LAMPS AND DATA LINKED		
	160-038	HEAVY DUTY ONBOARD DIAGNOSTICS INTERFACE CONNECTOR LOCATED BELOW LH DASH		
	844-001	2 INCH ELECTRIC FUEL GAUGE		
	148-072	ENGINE REMOTE INTERFACE WITH MULTIPLE SET SPEEDS		
	163-001	ENGINE REMOTE INTERFACE CONNECTOR AT BACK OF CAB		
	856-001	ELECTRICAL ENGINE COOLANT TEMPERATURE GAUGE		
	864-005	TRANSMISSION OIL TEMPERATURE INDICATOR LIGHT		
	830-017	ENGINE AND TRIP HOUR METERS INTEGRAL WITHIN DRIVER DISPLAY		
*	372-073	(1) DASH MOUNTED PTO SWITCH WITH INDICATOR LAMP - PARK BRAKE AND NEUTRAL INTERLOCK FOR CUSTOMER INSTALLED PTO	10	
	852-002	ELECTRIC ENGINE OIL PRESSURE GAUGE		
	679-001	OVERHEAD INSTRUMENT PANEL		
	35M-001	SMARTPLEX HUB MODULE WITH OVERHEAD SWITCH MOUNTING, DRIVER SIDE ONLY (6 SWITCH SLOTS)	44	
	746-137	AM/FM/WB WORLD TUNER RADIO WITH BLUETOOTH, USB AND AUXILIARY INPUTS, J1939	10	
	747-001	DASH MOUNTED RADIO		
	750-002	(2) RADIO SPEAKERS IN CAB		
	753-001	AM/FM ANTENNA MOUNTED ON FORWARD LH ROOF		
	810-027	ELECTRONIC MPH SPEEDOMETER WITH SECONDARY KPH SCALE, WITHOUT ODOMETER		
	817-001	STANDARD VEHICLE SPEED SENSOR		
	812-001	ELECTRONIC 3000 RPM TACHOMETER		
	162-002	IGNITION SWITCH CONTROLLED ENGINE STOP		
	44R-002	2 ON/OFF LATCHING SMARTPLEX SWITCHES		
	44V-002	BOOM OUT OF STOW & OUTRIGGER DEPLOYED SMARTPLEX INDICATOR LAMPS		
	836-015	DIGITAL VOLTAGE DISPLAY INTEGRAL WITH DRIVER DISPLAY		
	660-008	SINGLE ELECTRIC WINDSHIELD WIPER MOTOR WITH DELAY		

Prepared for:
Jim
McClain
CHICKASHA CITY OF
117 N 4TH ST

CHICKASHA, OK 73018
Phone: 405-222-6020

Prepared by:
Jane Kirton
PREMIER TRUCK GROUP OF
OKLAHOMA CITY
5301 I-40 WEST
OKLAHOMA CITY, OK 73128
Phone: 405-945-3577

Data Code	Description	Weight Front	Weight Rear
304-001	MARKER LIGHT SWITCH INTEGRAL WITH HEADLIGHT SWITCH		
882-009	ONE VALVE PARKING BRAKE SYSTEM WITH WARNING INDICATOR		
299-013	SELF CANCELING TURN SIGNAL SWITCH WITH DIMMER, WASHER/WIPER AND HAZARD IN HANDLE		
298-039	INTEGRAL ELECTRONIC TURN SIGNAL FLASHER WITH HAZARD LAMPS OVERRIDING STOP LAMPS		
Design			
065-000	PAINT: ONE SOLID COLOR		
Color			
980-5F6	CAB COLOR A: L0006EY WHITE ELITE EY		
986-020	BLACK, HIGH SOLIDS POLYURETHANE CHASSIS PAINT		
962-972	POWDER WHITE (N0006EA) FRONT WHEELS/RIMS (PKWHT21, TKWHT21, W, TW)		
966-972	POWDER WHITE (N0006EA) REAR WHEELS/RIMS (PKWHT21, TKWHT21, W, TW)		
964-6Z7	BUMPER PAINT: FP24812 ARGENT SILVER DUPONT FLEX		
963-003	STANDARD E COAT/UNDERCOATING		
Certification / Compliance			
996-001	U.S. FMVSS CERTIFICATION, EXCEPT SALES CABS AND GLIDER KITS		
Secondary Factory Options			
998-001	CORPORATE PDI CENTER IN-SERVICE ONLY		
Sales Programs			
	NO SALES PROGRAMS HAVE BEEN SELECTED		

TOTAL VEHICLE SUMMARY

Weight Summary

	Weight Front	Weight Rear	Total Weight
Factory Weight+	7911 lbs	4417 lbs	12328 lbs

Prepared for:
Jim
McClain
CHICKASHA CITY OF
117 N 4TH ST

CHICKASHA, OK 73018
Phone: 405-222-6020

Prepared by:
Jane Kirton
PREMIER TRUCK GROUP OF
OKLAHOMA CITY
5301 I-40 WEST
OKLAHOMA CITY, OK 73128
Phone: 405-945-3577

Total Weight+	7911 lbs	4417 lbs	12328 lbs

Extended Warranty

WAI-47J	CUM 2017 L9: HD1 MD DTY 5 YEARS / 150,000 MILES / 241,500 KM EXTENDED WARRANTY. FEX APPLIES
WAX-102	CUM 2017 L9: AT3 MD DTY 5 YEARS / 150,000 MILES / 241,500 KM AFTERTREATMENT. FEX APPLIES
WAK-122	ALLISON 3500 RDS TRANSMISSION FOR REFUSE EXTENDED WARRANTY, 5 YEARS/UNLIMITED MILEAGE FEX
WAG-078	TOWING: 5 YEARS/UNLIMITED MILES/KM EXTENDED TOWING COVERAGE $750 CAP FEX APPLIES

(+) Weights shown are estimates only.
If weight is critical, contact Customer Application Engineering.

(***) All cost increases for major components (Engines, Transmissions, Axles, Front and Rear Tires) and government mandated requirements, tariffs, and raw material surcharges will be passed through and added to factory invoices.

Prepared for:
Jim
McClain
CHICKASHA CITY OF
117 N 4TH ST

CHICKASHA, OK 73018
Phone: 405-222-6020

Prepared by:
Jane Kirton
PREMIER TRUCK GROUP OF
OKLAHOMA CITY
5301 I-40 WEST
OKLAHOMA CITY, OK 73128
Phone: 405-945-3577

DIMENSIONS

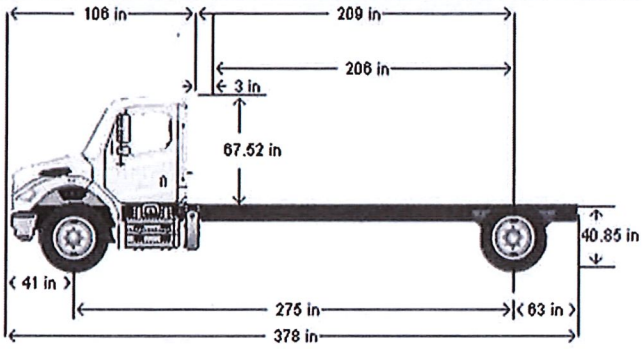

VEHICLE SPECIFICATIONS SUMMARY - DIMENSIONS

Model M2106
Wheelbase (545) ..... 6975MM (275 INCH) WHEELBASE
Rear Frame Overhang (552) ..... 1600MM (63 INCH) REAR FRAME OVERHANG
Fifth Wheel (578) ..... NO FIFTH WHEEL
- Mounting Location (577) ..... NO FIFTH WHEEL LOCATION
- Maximum Forward Position (in) 0
- Maximum Rearward Position (in) 0
- Amount of Slide Travel (in) 0
- Slide Increment (in) 0
- Desired Slide Position (in) 0.0

Cab Size (829) ..... 106 INCH BBC FLAT ROOF ALUMINUM CONVENTIONAL CAB
Sleeper (682) ..... NO SLEEPER BOX/SLEEPERCAB
Exhaust System (016) ..... RH OUTBOARD UNDER STEP MOUNTED HORIZONTAL AFTERTREATMENT SYSTEM ASSEMBLY WITH RH HORIZONTAL TAILPIPE

Prepared for:
Jim
McClain
CHICKASHA CITY OF
117 N 4TH ST

CHICKASHA, OK 73018
Phone: 405-222-6020

Prepared by:
Jane Kirton
PREMIER TRUCK GROUP OF
OKLAHOMA CITY
5301 I-40 WEST
OKLAHOMA CITY, OK 73128
Phone: 405-945-3577

TABLE SUMMARY - DIMENSIONS

Dimensions	Inches
Bumper to Back of Cab (BBC)	106.3
Bumper to Centerline of Front Axle (BA)	40.7
Front Axle to Back of Cab (AC)	65.6
Min. Cab to Body Clearance (CB)	3.0
Back of Cab to Centerline of Rear Axle(s) (CA)	209.1
Effective Back of Cab to Centerline of Rear Axle(s) (Effective CA)	206.1
Back of Cab Protrusions (Exhaust/Intake) (CP)	2.0
Back of Cab Protrusions (Side Extenders/Trim Tab) (CP)	0.0
Back of Cab Protrusions (CNG Tank)	0.0
Back of Cab Clearance (CL)	3.0
Back of Cab to End of Frame	272.0
Cab Height (CH)	67.5
Wheelbase (WB)	274.6
Frame Overhang (OH)	63.0
Overall Frame Length	376.6
Overall Length (OAL)	378.3
Rear Axle Spacing	0.0
Unladen Frame Height at Centerline of Rear Axle	40.9

Performance calculations are estimates only. If performance calculations are critical, please contact Customer Application Engineering.

Prepared for:
Jim
McClain
CHICKASHA CITY OF
117 N 4TH ST

CHICKASHA, OK 73018
Phone: 405-222-6020

Prepared by:
Jane Kirton
PREMIER TRUCK GROUP OF
OKLAHOMA CITY
5301 I-40 WEST
OKLAHOMA CITY, OK 73128
Phone: 405-945-3577

SPEEDABILITY

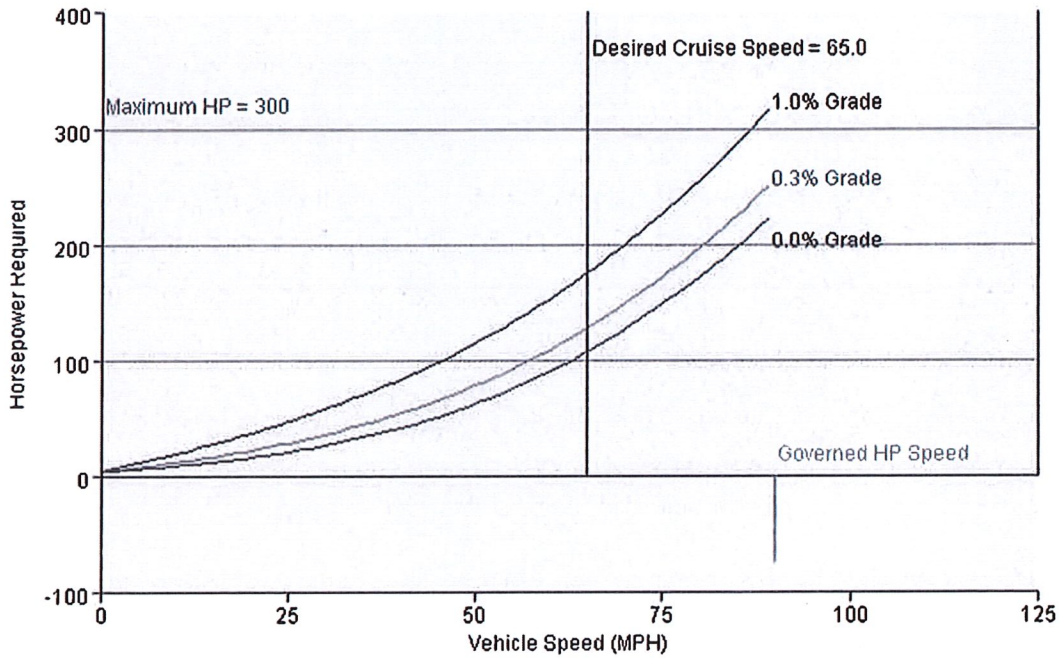

VEHICLE SPECIFICATIONS SUMMARY - SPEEDABILITY

Model.....M2106
Cab Size (829).....106 INCH BBC FLAT ROOF ALUMINUM CONVENTIONAL CAB
Desired Cruise Speed (mph).....65.0

Prepared for:
Jim
McClain
CHICKASHA CITY OF
117 N 4TH ST

CHICKASHA, OK 73018
Phone: 405-222-6020

Prepared by:
Jane Kirton
PREMIER TRUCK GROUP OF
OKLAHOMA CITY
5301 I-40 WEST
OKLAHOMA CITY, OK 73128
Phone: 405-945-3577

Expected Front Axle(s) Load (lbs) 14000.0
Expected Pusher Axle(s) Load (lbs) 0.0
Expected Rear Axle(s) Load (lbs) 23000.0
Expected Tag Axle(s) Load (lbs) 0.0
Expected GVW (lbs) 37000
Expected GCW (lbs) 0.0
Engine (101) ..... CUM L9 300 HP @ 2200 RPM, 2200 GOV RPM, 860 LB-FT @ 1200 RPM, REFUSE
- Governed RPM 2200
- HP at Governed RPM 300
- RPM at Max HP 2200
- Max HP 300
- HP at Governed RPM (High Torque) 300
- RPM at Max HP (High Torque) 2200
- Max HP (High Torque) 300
- Multi-torque ..... NO

Transmission (342) ..... ALLISON 3500 RDS AUTOMATIC TRANSMISSION WITH PTO PROVISION
Rear Axle (420) ..... DETROIT DA-RS-23.0-4 23,000# R-SERIES SINGLE REAR AXLE
- Number of Speeds 1
- Rear Axle Gear Ratio(s) ..... 3.91 REAR AXLE RATIO

Rear Tires (094) ..... MICHELIN XZE2 11R22.5 14 PLY RADIAL REAR TIRES
- Revolutions per Mile 501
- Trailer Width (in) 0.0

Trailer Height (ground to top) (ft) 6.0
Body Width (in) 96.0
Body Height (ground to top) (ft) 6.0
Roof Mounted Aero Device (784) ..... NO AIR SHIELD OR BRACKETS
Road Surface (AB5). SMOOTH CONCRETE OR ASPHALT PAVEMENT - MOST SEVERE IN-TRANSIT (BETWEEN SITES) ROAD SURFACE
Auxiliary Transmission (352) ..... NO AUXILIARY TRANSMISSION
- High Gear Ratio ..... N/A
- Low Gear Ratio ..... N/A

Transfer Case (373) ..... NO TRANSFER CASE
- High Gear Ratio ..... N/A
- Low Gear Ratio ..... N/A

TABLE SUMMARY - SPEEDABILITY

Prepared for:
Jim
McClain
CHICKASHA CITY OF
117 N 4TH ST

CHICKASHA, OK 73018
Phone: 405-222-6020

Prepared by:
Jane Kirton
PREMIER TRUCK GROUP OF
OKLAHOMA CITY
5301 I-40 WEST
OKLAHOMA CITY, OK 73128
Phone: 405-945-3577

Top Gear Speedability	At Max Power Speed	At Desired Cruise Speed
Top Gear Vehicle Speed (mph)	89.8	65.0
Engine RPM	2200	1592
Gross Power Available (HP)	300	N/A
Power (HP) Required for:		
Level Road	227	108
0.3% Grade	256	128
1.0% Grade	322	176
*Blue background represents value input by user.		

Performance calculations are estimates only. If performance calculations are critical, please contact Customer Application Engineering.

Prepared for:
Jim
McClain
CHICKASHA CITY OF
117 N 4TH ST

CHICKASHA, OK 73018
Phone: 405-222-6020

Prepared by:
Jane Kirton
PREMIER TRUCK GROUP OF
OKLAHOMA CITY
5301 I-40 WEST
OKLAHOMA CITY, OK 73128
Phone: 405-945-3577

OPERATING SPEED

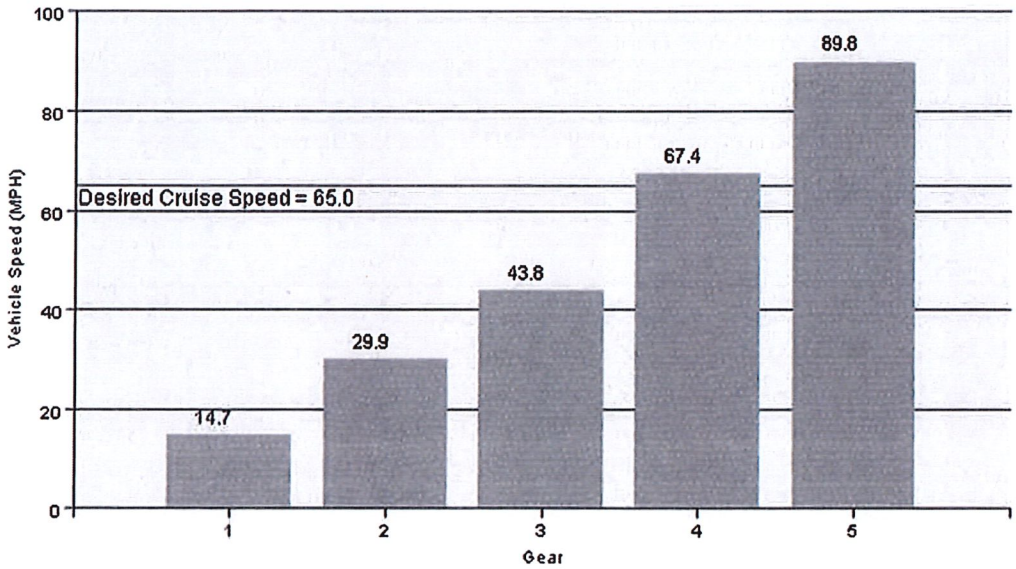

Rear Axle Ratio = 3.91 Engine RPM = 2200

VEHICLE SPECIFICATIONS SUMMARY - OPERATING SPEED

Model.....M2106
Cab Size (829).....106 INCH BBC FLAT ROOF ALUMINUM CONVENTIONAL CAB
Top Speed (mph).....89.8

Prepared for:
Jim
McClain
CHICKASHA CITY OF
117 N 4TH ST

CHICKASHA, OK 73018
Phone: 405-222-6020

Prepared by:
Jane Kirton
PREMIER TRUCK GROUP OF
OKLAHOMA CITY
5301 I-40 WEST
OKLAHOMA CITY, OK 73128
Phone: 405-945-3577

Engine RPM.....2200.0
Desired Cruise Speed (mph).....65.0
Engine (101).....CUM L9 300 HP @ 2200 RPM, 2200 GOV RPM, 860 LB-FT @ 1200 RPM, REFUSE
Governed RPM.....2200
Transmission (342).....ALLISON 3500 RDS AUTOMATIC TRANSMISSION WITH PTO PROVISION
Rear Axle (420).....DETROIT DA-RS-23.0-4 23,000# R-SERIES SINGLE REAR AXLE
Number of Speeds.....1
Rear Axle Gear Ratio(s).....3.91 REAR AXLE RATIO
Rear Tires (094).....MICHELIN XZE2 11R22.5 14 PLY RADIAL REAR TIRES
Revolutions per Mile.....501
Auxiliary Transmission (352).....NO AUXILIARY TRANSMISSION
High Gear Ratio.....N/A
Low Gear Ratio.....N/A
Transfer Case (373).....NO TRANSFER CASE
High Gear Ratio.....N/A
Low Gear Ratio.....N/A

TABLE SUMMARY - OPERATING SPEED

Transmission Gear	Transmission Gear Ratio	Overall Gear Ratio	Vehicle Speed (MPH)
1	4.59	17.95	14.7
2	2.25	8.80	29.9
3	1.54	6.02	43.8
4	1.00	3.91	67.4
5	0.75	2.93	89.8
Desired Cruise Speed (mph)			65.0
Engine RPM			2200
Rear Axle Ratio			3.91

***Blue background represents value input by user.**

Performance calculations are estimates only. If performance calculations are critical, please contact Customer Application Engineering.

City of
CHICKASHA

Meeting Type: Council Agenda 12-5-2022

Meeting Date: 12/5/2022

Department: City Clerk **Agenda Item No. 6.f.**

AGENDA ITEM: Discussion, consideration, and possible action to approve Resolution 2022-26R and authorize the Mayor to issue the Election Proclamation - A Resolution of the Mayor and Council of the City of Chickasha, Grady County, State of Oklahoma, calling for a Non-Partisan Regular Election for the purposes of electing officers of the City of Chickasha, setting a date for said election, setting the filing period for the purpose of allowing qualified candidates to file a declaration of candidacy, setting forth the qualifications for office, setting a final presentment date to the county election board, and setting a final date for publication.

I. BACKGROUND/DESCRIPTION:

II. RECOMMENDED ACTION:

Approve Resolution 2022-26R and authorize the Mayor to issue the Election Proclamation - A Resolution of the Mayor and Council of the City of Chickasha, Grady County, State of Oklahoma, calling for a Non-Partisan Regular Election for the purposes of electing officers of the City of Chickasha, setting a date for said election, setting the filing period for the purpose of allowing qualified candidates to file a declaration of candidacy, setting forth the qualifications for office, setting a final presentment date to the county election board, and setting a final date for publication.

III. FISCAL INFORMATION -

IV. FUND INFORMATION:

Dept. Director: Susan M. McDaniel, CMC City Clerk	Fund	Account	Amount
	(To)		
	FUND	ACCOUNT	AMOUNT
Meeting Date: December 5, 2022	(From)		

V. ATTACHMENTS:

1. ELECTION PROCLAMATION - 2023 Elections
2. Res. 2022-26R 2023 Election Resolution

ELECTION PROCLAMATION

Pursuant to the Resolution of the Mayor and Council of the City of Chickasha, Oklahoma, authorizing the calling of an election by the qualified electors of the City of Chickasha, Oklahoma for the purpose hereinafter set forth, I, the undersigned Mayor of the City of Chickasha, Oklahoma, do hereby call an election to be held within the limits of the City of Chickasha, Oklahoma, on the first Tuesday of April, 2023 (April 4, 2023) within the wards of said city in each precinct set out herein as provided by law, for the purpose of the election of four (4) Council Members (Position 1 in Wards 1-4) for a term beginning the third Monday in April (April 17, 2023). I further direct that the filing period for said election shall be on February 6th, 7th, and 8th, 2023 at the office of the City Clerk of the City of Chickasha, Oklahoma, during the hours of 8:00 a.m. and 5:00 p.m. each day.

I do further direct that said election shall be held by the Election Board of Grady County, Oklahoma, in the manner and form provided by law in each of the precincts in each of said wards, and that the polls shall be opened at 7:00 o'clock a.m. and remain open continuously, and shall be closed at 7:00 p.m. on the day of the election.

I do further direct that the returns of said election be canvassed by the County Election Board of Grady County, Oklahoma, and that the results of said election shall be by said County Election Board certified to the Mayor of the City of Chickasha, Oklahoma, through the City Clerk thereof.

Witness our hands as Mayor of the City of Chickasha, Oklahoma, and the City Clerk, of the City of Chickasha, Oklahoma, on this 5th day of December 2022.

ATTEST: _____ Chris Mosley, Mayor

_____
Susan M. McDaniel, CMC - City Clerk

(S E A L)

RESOLUTION NO. 2022-26R

A RESOLUTION OF THE MAYOR AND COUNCIL OF THE CITY OF CHICKASHA, GRADY COUNTY, STATE OF OKLAHOMA, CALLING FOR A NON-PARTISAN REGULAR ELECTION FOR THE PURPOSES OF ELECTING OFFICERS OF THE CITY OF CHICKASHA, SETTING A DATE FOR SAID ELECTION, SETTING THE FILING PERIOD FOR THE PURPOSE OF ALLOWING QUALIFIED CANDIDATES TO FILE A DECLARATION OF CANDIDACY, SETTING FORTH THE QUALIFICATIONS FOR OFFICE, SETTING A FINAL PRESENTMENT DATE TO THE COUNTY ELECTION BOARD, AND SETTING A FINAL DATE FOR PUBLICATION.

BE IT RESOLVED BY THE MAYOR AND COUNCIL OF THE CITY OF CHICKASHA, GRADY COUNTY, STATE OF OKLAHOMA.

That in accordance with the Charter of the City of Chickasha, Grady County, Oklahoma, the Chickasha Code of Ordinances, and the statutes of the State of Oklahoma, a Non-Partisan Regular Election shall be conducted by the Grady County Election Board in the City of Chickasha, Oklahoma, on the first Tuesday in April, 2023 (April 4, 2023), for the purpose of electing the following municipal officer positions and terms:

1. Council Member for Ward 1 (Position 1) for a term of two (2) years.
2. Council Member for Ward 2 (Position 1) for a term of two (2) years.
3. Council Member for Ward 3 (Position 1) for a term of two (2) years.
4. Council Member for Ward 4 (Position 1) for a term of two (2) years.

BE IT FURTHER RESOLVED THAT the officers of City of Chickasha to be elected are nominated by Ward and elected at large.

BE IT FURTHER RESOLVED that the election of four (4) Council Members for a two (2) year term shall be by qualified electors of the City of Chickasha. The election shall be Tuesday, April 4, 2023, with said candidates to file for said offices with the office of the City Clerk of the City of Chickasha, Grady County, Oklahoma, during the hours of 8:00 a.m. and 5:00 p.m. on February 6th, 7th, and 8th, 2023. A filing fee of twenty-five Dollars ($25.00) is required. The Council members elected April 4, 2023 shall begin their terms on the third Monday in April, 2023 (April 17, 2023).

BE IT FURTHER RESOLVED that each candidate for office shall be a qualified elector who has been a registered voter at an address within the City of Chickasha, and of the ward for at least six (6) months and shall fully comply with the provisions of the Ordinances and the Charter of the City of Chickasha, Oklahoma, and the election laws of the State of Oklahoma. A candidate for office from a ward shall be an actual resident of their respective ward at the time of their candidacy and election, and shall remain a resident of their respective ward for the full term of office.

BE IT FURTHER RESOLVED that a copy of this Resolution be presented to the Grady County Election Board at least Sixty (60) days prior to the date of the Non-Partisan Election and at least fifteen (15) days prior to the first day of the filing period established herein and in no event later than January 13, 2023.

BE IT FURTHER RESOLVED that a copy of this Resolution be published in a newspaper of general circulation within the City of Chickasha at least ten (10) days prior to the first day of the filing period established herein and in no event later than January 27, 2023.

ADOPTED AND APPROVED this 5th day of December 2022.

_____
Chris Mosley, Mayor

ATTEST:

_____
Susan M. McDaniel, CMC - City Clerk

(S E A L)

City of
CHICKASHA

Meeting Type: Council Agenda 12-5-2022

Meeting Date: 12/5/2022

Department: Community Development **Agenda Item No. 6.g.**

AGENDA ITEM: Discussion, consideration, and possible action to waive the competitive quote process and authorize the purchase of a new 2022 Ford Explorer SUV for the Community Development Code Enforcement Officer under State Contract SW0035 from Vance Country Ford in an amount not to exceed $35,390.20

I. BACKGROUND/DESCRIPTION:

This is for new code enforcement vehicle. for a ford explorer.

this is a budgeted item and this is on state contract pricing.

II. RECOMMENDED ACTION:

III. FISCAL INFORMATION -

IV. FUND INFORMATION:

Dept. Director: NAME, TITLE Rachel Bernish	Fund	Account	Amount
	(To)		
	FUND	ACCOUNT	AMOUNT
Meeting Date: December 5, 2022	(From) 11-546-6300-040		$35,390.20

V. ATTACHMENTS:

1. 000Q10319

VANCE COUNTRY FORD

FLEET & GOVERNMENT SALES
PO BOX 1600, GUTHRIE, OK 73044
405-282-3800

JOHN VANCE FLEET SERVICES

QUOTE

DATE	11/30/2022
QUOTE NUMBER	000Q10319
EXPIRATION DATE	12/9/2022
SHIP VIA	Factory Order
TERMS	SW035 - STATE CONTRACT

SOLD TO:
City of Chickasha

Rachel Bernish
117 N 4th
Chickasha, OK 73018
(405)222-6012

SHIP TO:
City of Chickasha
Rachel Bernish
117 N 4th
Chickasha, OK 73018
(405)222-6012

Any Questions? Call 405-282-3800
Shauna Ford

shauna@vancefleet.com

Qty	OPTION	Description	Unit Price	Ext. Price
1	K8D	2022 FORD EXPLORER	$26,989.00	$26,989.00
1	4WD	4 WHEEL DRIVE	$985.00	$985.00
1	200A	XLT EQUIPMENT GROUP	$6,484.00	$6,484.00
1	99H	ENGINE: 2.3L ECOBOOST I-4	$0.00	$0.00
1	44T	TRANSMISSION: 10-SPEED AUTOMATIC	$0.00	$0.00
1	16A	ALL WEATHER MATS	$160.00	$160.00
1	924	FACTORY DEEP TINTED GLASS	$189.00	$189.00
1	52T	TRAILER TOW PACKAGE	$540.00	$540.00
1	942	DAYTIME RUNNING LIGHTS	$43.20	$43.20
1	86	INTERIOR: EBONY CLOTH CAPTAINS CHAIRS	$0.00	$0.00
1	JS	EXTERIOR: ICONIC SILVER METALLIC	$0.00	$0.00
		SubTotal		**$35,390.20**

Accepted By: _____
Terms:
THIS QUOTE DOES NOT GUARANTEE THE FACTORY WILL BUILD THE VEHICLE.
1) TAG & TAXES ARE NOT INCLUDED UNLESS ITEMIZED ON QUOTE
2) ALL REBATES & INCENTIVES HAVE BEEN INCLUDED IN TOTAL PRICE.
3) PURCHASE ORDER REQUIRED TO ORDER VEHICLE

SUB-TOTAL	**$35,390.20**
	$0.00
TOTAL DUE	**$35,390.20**

City of
CHICKASHA

Meeting Type: Council Agenda 12-5-2022

Meeting Date: 12/5/2022

Department: Community Development **Agenda Item No. 6.h.**

AGENDA ITEM: Discussion, consideration, and possible action to approve an agreement with WANRack LLC for the use of public right-of-ways to provide telecommunications services for Chickasha Independent School District.

I. BACKGROUND/DESCRIPTION:

II. RECOMMENDED ACTION:

Approve the agreement with WANRack LLC the use of public right-of-ways to provide telecommunications services for Chickasha Independent School District and authorize the Mayor to execute the same.

III. FISCAL INFORMATION -

IV. FUND INFORMATION:

Dept. Director:	Fund	Account	Amount
	(To)		
	FUND	ACCOUNT	AMOUNT
Meeting Date: December 5, 2022	(From)		

V. ATTACHMENTS:

1. Wanrack Chickasha OK License Agreement

LICENSE AGREEMENT

THIS LICENSE AGREEMENT (the **"Agreement"**) is made this ____ day of December 2022 (the **"Effective Date"**) by and between the City of Chickasha, Oklahoma, a municipal corporation (the "**City**"), and WANRack, LLC, a Delaware limited liability company (**"Licensee"**).

RECITALS

WHEREAS, Licensee has requested consent of the City to use certain public rights-of-way to construct, maintain, and operate its facilities for use in providing telecommunications services within the municipality for its own business purposes and profit;

WHEREAS, it is the policy of the City to permit such entry into the corporate limits and such use of the public rights-of-way for the provision of telecommunication services, subject to the exercise of the City's police powers;

WHEREAS, Licensee wishes to install fiber optic cable and equipment in, on, under through and above the right-of-way of the City set forth in Exhibit A to enhance its abilities to provide telecommunications services to residents of the City; and

WHEREAS, the City has agreed to permit Licensee to install fiber optic cable and equipment in the public right-of-way for the purpose providing telecommunications services to the City's residents, in accordance with the approved plans described in Exhibit A and in accordance with the terms and conditions of this License.

AGREEMENT

NOW, THEREFORE, in consideration of the mutual promises and obligations contained herein, the parties hereby agree as follows:

1. **Grant of License**. Provided Licensee receives all necessary City, State and Federal approvals to install its fiber optic cable and equipment in the manner proposed, the City hereby grants to the Licensee the non-exclusive license, right, privilege, and permission (the **"License"**) to use in common with others an area in, on, under through, and above the right-of-way to access in a safe and professional manner and with the prior approval of the City Engineer, the fiber optic cable and equipment located as described in Exhibit A, for the purpose of installing and maintaining, at Licensee's sole cost and expense, fiber optic cable and equipment. Nothing in this License Agreement shall be interpreted to give Licensee authority to install (1) any equipment other than the equipment approved in Exhibit A; and (2) on any other City property or right-of-way not specifically described in Exhibit A without the prior approval of the City.

2. **No Representation by the City**. The Licensee represents that the City has made no representations with respect to the right-of-way or its condition, and that the Licensee is not relying on any representations of the City or the City's agents with respect to the use or condition of the right-of-way. This Agreement grants the Licensee the privilege and permission to use that portion of the right-of-way in its present condition "as is" without any warranties subject to the conditions set forth herein.

3. **Covenants of the Licensee**. The Licensee hereby covenants and warrants to the City, as follows:

a. To install and maintain its fiber optic cable and equipment at the Licensee's sole cost and expense for the duration of this Agreement.
b. To employ persons who are qualified to perform the installation and maintenance work and who are trained in appropriate safety procedures for the installations and maintenance work in the City's right-of-way.
c. To cause said persons installing and maintaining Licensee's fiber optic cable and equipment to use "Best Practices" in all work related to the installation and maintenance of the fiber optic cable and equipment.
d. To cause said persons installing and maintaining Licensee's fiber optic cable and equipment to use at all times industry standard safety gear, including fall restraints and other safety equipment for such installation and maintenance work;
e. To procure and maintain at all times during the Term (defined in Section 6 below) of this Agreement general liability insurance for Licensee's equipment and installation and maintenance operations in the amount of $1,000,000.00 for each occurrence, $1,000,000.00 of coverage for personal injury and $2,000,000.00 general aggregate coverage and $300,000.00 coverage for damage to City property and to furnish the City with satisfactory proof of the insurance required.
f. To allow only authorized representatives of Licensee to access the right- of-way for installation or maintenance work. For the purposes of this provision, "authorized representatives of Licensee" shall mean persons covered by Licensee's general liability insurance policy in effect during the Term.
g. To obtain a temporary use of right-of-way permit from the applicable City office prior to any installation or maintenance work in the right-of-way.
h. To refrain from causing any waste, damage, or injury to the right-of-way.
i. The Licensee's use of the right-of-way shall always be subject and subordinate to the City's use of the right-of-way for any public purposes. The Licensee shall coordinate the placement of its facilities in a manner that minimizes adverse impact on public improvements, as reasonably determined by the City. Where placement is not otherwise regulated, the facilities shall be placed with adequate clearance from such public improvements so as not to impact or be impacted by such public improvement.
j. That all earth, materials, sidewalks, paving, crossings, utilities, public improvements or improvements of any kind injured, damaged or removed by the Licensee in its activities under this Agreement shall be fully repaired or replaced within a reasonable time by the Licensee at its sole expense and to the reasonable satisfaction of the City.
k. To ensure traffic is not unreasonably impeded by Licensee's installation or maintenance work.
l. To remove, adjust, or relocate Licensee's fiber optic cable and equipment immediately when the City deems it an emergency, or when the City reasonably determines the equipment is interfering with or reducing the efficiency of City equipment or operations.
m. To comply with all applicable state, federal and local laws, ordinances and regulations now or hereafter adopted or promulgated relating to its use and

occupancy of the right of way.

n. The Licensee shall not have any right to enlarge the present scope of this Agreement, without the prior written consent of the City.

o. It shall be the sole responsibility of the Licensee to take adequate measures to protect and defend its fiber optic cable and equipment in the right-of-way from harm and damage and acknowledges and agrees that the City is not liable for any harm or damage that may occur to Licensee's fiber optic cable and/or equipment in the right-of-way.

p. The Licensee hereby acknowledges the City's rights to the right-of-way, and agrees to never assail, resist, or deny such rights by virtue of the Licensee's occupancy or use under this Agreement.

4. **Indemnification of the City**. During the Term, the Licensee agrees to indemnify, defend, and save the City, and the City's officers, commissioners, agents, employees, grantees, and assigns, harmless from and against all claims, actions, liabilities, damages, costs, expenses, and judgments, including attorneys' fees, which relate to, arise from, or are in connection with the Licensee's use, occupancy or maintenance of the right of way or any portion thereof on account of any injury to persons or damage to property, excluding therefrom such injury or damage caused by the negligence or misconduct of the City.

5. **License Fee**. In exchange for the granting of the License, Licensee agrees to pay to the City an annual fee equal to 5% of Licensee's gross revenue derived from fiber network services provided to its customers as the result of Licensee's installation of its facilities within the City's right-of-way, which shall be due upon each successive anniversary date of this Agreement. The annual fee shall **not** include any of Licensee's gross revenues from services provided to the Chickasha Independent School District #1 (the "School District") in accordance with the Wide Area Network Leasing and Services Agreement, dated March 16, 2022, between Licensee and the School District, as the same may be amended from time to time. Licensee shall pay permit fees and inspection fees, sales taxes, personal and real property taxes, ad valorem taxes, any fees levied for the purpose of funding the E9-1-1 system, and the two percent (2%) Telephone Inspection Fee.

6. **Term**. The initial term of this Agreement (the "Initial Term") will commence on the Effective Date and will continue for a period of five (5) years. Following expiration of the Initial Term, the term of this Agreement will automatically be extended for up to three additional five (5) year periods (the "Renewal Term") unless either Party gives the other Party written notice of its desire to not renew this Agreement at least one hundred twenty (120) days prior to the end of the Initial Term or the then current Renewal Term. The Initial Term and the Renewal Terms are sometimes referred to in this Agreement, collectively, as the "Term."

7. **Default**. Upon the Licensee's failure to comply with or abide by each and all of the provisions of this Agreement, the City shall be entitled to give notice of default. Licensee shall have thirty (30) days from the date of the receipt of the notice to cure the default. The City may, if such default continues, terminate this Agreement without further notice.

8. **Notice**. Notice under this License Agreement, including denials or revocation or alteration of site specific approvals, notice to remove equipment and any other notice shall be provided in writing to the parties hereto as follows:

Notice to the City:	Notice to the Licensee:
City of Chickasha 117 North 4th Street Chickasha, OK 73018	WANRack, LLC 4550 West 109th Street, Suite 115 Overland Park, KS 66211
Attn: City Manager	Attn: Legal Department

9. **Assignment; Successors.** This Agreement is binding upon and inures to the benefit of the successors and permitted assigns of the parties to this Agreement; provided, however, that neither party may assign its rights or obligations under this Agreement without the prior written consent of the other party, which may not withhold or delay its consent unreasonably. Notwithstanding the preceding sentence, the Licensee may, without the City's consent, (i) assign its rights and obligations under this Agreement to an affiliate, (ii) assign its right to receive payments under this Agreement to any creditor, and (iii) assign its rights and obligations under this Agreement to an entity acquiring all or substantially all of the Licensee's assets. Any purported assignment prohibited by this provision will be null and void.

10. **Governing Law**. This Agreement shall be governed by and construed in accordance with the laws of the State of Oklahoma, without regard to conflicts of law principles. The District Courts of Grady County Oklahoma shall be the sole and exclusive venue.

11. **Severability.** Any term or provision of this Agreement that is invalid or unenforceable in any situation in any jurisdiction (i) will be deemed modified to reflect the intent of the parties, determined by reference to the invalid or unenforceable term or provision, to the greatest permissible extent and (ii) will not affect the validity or enforceability of the remaining terms and provisions of this Agreement or the validity or enforceability of the offending term or provision in any other situation or jurisdiction.

12. **Waiver.** Any failure or delay by either party in exercising any right or remedy under this Agreement will not constitute a waiver of that right or remedy. Any waiver by either Party of any right or remedy under this Agreement must be in writing and signed by the Party waiving the right or remedy.

13. **Entire Agreement.** This Agreement constitutes the entire agreement of the parties with regard to the subject matter hereof and supersedes any and all prior agreements or understandings, written or oral, including any documents exchanged between the Parties during any request for proposal or bidding process. Any amendment to this Agreement must be in writing and signed by both parties.

14. **Counterparts.** This Agreement may be executed in two or more counterparts, each of which will be deemed an original, but which together will constitute one and the same instrument. Counterparts may be delivered via facsimile, electronic mail (including .pdf) or other transmission method, and any counterpart so delivered will be deemed to have been duly and validly delivered and be valid and effective for all purposes.

IN WITNESS WHEREOF, the undersigned have caused this Agreement to be executed as of the Effective Date.

City of Chickasha, Oklahoma

By:_____
Name:Chris Mosley
Title: Mayor

WANRack, LLC

By:_____
Name: Michael L. Brigman
Title: President

Exhibit A

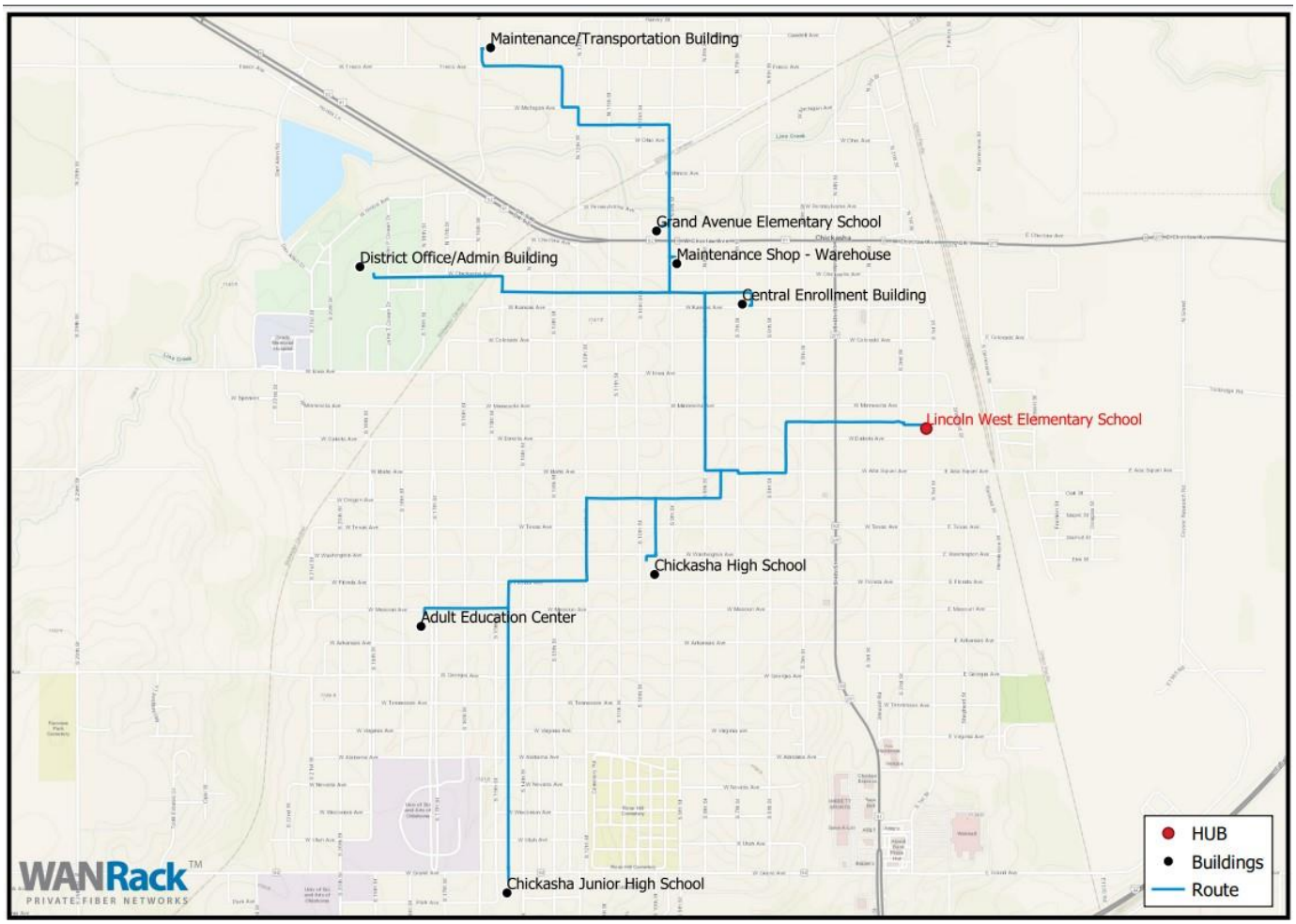

City of
CHICKASHA

Meeting Type: Council Agenda 12-5-2022

Meeting Date: 12/5/2022

Department: Parks and Rec **Agenda Item No. 6.i.**

AGENDA ITEM: Discussion, consideration, and possible action to accept COC-2201 - Shannon Springs Park Electrical Expansion Project as complete and authorize the final payment in the amount off $5,112.95 to ETI.

I. BACKGROUND/DESCRIPTION:

Final Inspection was completed by R. Scott Vaughn on November 18, 2022 and found no exceptions.

II. RECOMMENDED ACTION:

Accept COC-2201 - Shannon Springs Park Electrical Expansion Project as complete and authorize the final payment in the amount of $5,112.95 to ETI.

III. FISCAL INFORMATION -

IV. FUND INFORMATION:

Dept. Director: Spencer Winzenried, Parks & Rec Director	Fund	Account	Amount
	(To)		
	FUND	ACCOUNT	AMOUNT
Meeting Date: December 5, 2022	(From)		

V. ATTACHMENTS:

1. Final Inspection Report COC-2201
2. Shannon Springs Electrical Expansion-PA4(Retainage) Recommended

CHISHOLM TRAIL CONSULTING, LLC

R. Scott Vaughn, P.E., CFM
Professional Engineering Services
580-467-8130
rscottv11@gmail.com

FINAL INSPECTION REPORT

DATE: November 18, 2022

TO: File

FROM: R. Scott Vaughn, P.E., CFM

PROJECT: COC-2201
2022 Shannon Springs Park
Electrical Expansion Project

A final inspection on the above project was made on: Monday, 11/14/2022 by City representatives and on Friday, 11/18/2022 by CTC

11/18/2022 Attendance:

Name	Organization
R. Scott Vaughn, P.E., CFM	Chisholm Trail Consulting, LLC

The noted project was found to be acceptable with the following exceptions:

1. No exceptions were discovered during the 11/18/2022 inspection.

Chisholm Trail Consulting, LLC recommends acceptance of the project as complete and in conformance with the contract documents, subject to AHJ recommendations.

Cc: Parks and Rec Director
Chief Building Official
Contractor

APPLICATION AND CERTIFICATION FOR PAYMENT

AIA DOCUMENT G702

TO OWNER:
City of Chickahsa
117 N. 4th Street
Chickasha, OK 73018

PROJECT: Shannon Springs Park Electrical Expansion

APPLICATION NO: 4 (Retainage)

Distribution to:
- [X] OWNER
- [ ] ARCHITECT
- [ ] CONTRACTOR

PERIOD FROM:
PERIOD TO: 11/14/2022

FROM CONTRACTOR:
Electrical Technologies, Inc
PO Box 308
Chickasha, OK 73023-0308

VIA ARCHITECT:

PROJECT NOS:

CONTRACT FOR: Electrical

CONTRACT DATE: 7/5/2022

CONTRACTOR'S APPLICATION FOR PAYMENT

Application is made for payment, as shown below, in connection with the Contract.
Continuation Sheet, AIA Document G703, is attached.

1.	ORIGINAL CONTRACT SUM		$ 102,259.00
2.	Net change by Change Orders		$ 0.00
3.	CONTRCT SUM TO DATE (Line 1 + 2)		$ 102,259.00
4.	TOTAL COMPLETED & STORED TO DATE (Column G on G703)		$ 102,259.00
5.	RETAINAGE:		
	a. 5 % of Completed Work (Column D + E on G703)	$ 0.00	
	b. 5 % of Stored Material (Column F on G703)	$ 0.00	
	Total Retainage (Lines 5a + 5b or Total in Column I of G703)		$ 0.00
6.	TOTAL EARNED LESS RETAINAGE (Line 4 Less Line 5 Total)		$ 102,259.00
7.	LESS PREVIOUS CERTIFICATES FOR PAYMENT (Line 6 from prior Certificate)		$ 97,146.05
8.	CURRENT PAYMENT DUE		$ 5,112.95
9.	BALANCE TO FINISH, INCLUDING RETAINAGE (Line 3 less Line 6)		$ 0.00

CHANGE ORDER SUMMARY	ADDITIONS	DEDUCTIONS
Total changes approved in previous months by Owner		
Total approved this Month		
TOTALS	0.00	0.00
NET CHANGES by Change Order	0.00	

The undersigned Subcontractor certifies that to the best of the Subcontractor's knowledge, information and belief the Work covered by this Application for Payment has been completed in accordance with the Contract Documents, that all amounts have been paid by the Subcontractor for Work for which previous Certificates for Payment were issued and payments received from the Contractor/Owner, and that current payment shown herein is now due

CONTRACTOR:

By: Joe Hutsinpiller Date: 11-14-2022

State of: OKLAHOMA County of: GRADY
Subscribed and sworn to before me this 14th day of NOVEMBER 2022
Notary Public: Robin M. Brooks
My Commission expires: 9-14-2023

NOTARY PUBLIC State of OK
ROBERT M. BROOKS
Comm. # 15008629
Expires 09-14-2023

CERTIFICATE FOR PAYMENT

In accordance with the Contract Documents, based on on-site observations and the data comprising the application, the Supervisory Official certifies to the Owner that to the best of the Supervisory Official's knowledge, information and belief the Work has progressed as indicated, the quality of the Work is in accordance with the Contract Documents, and the Subcontractor is entitled to payment of the AMOUNT CERTIFIED.

AMOUNT CERTIFIED.....$ 5,112.95

(Attach explanation if amount certified differs from the amount applied. Initial all figures on this Application and on the Continuation Sheet that are changed to conform with the amount certified.)

SUPERVISORY OFFICIAL:

By: R Scott Vaughn Date: 11/18/2022

This Certificate is not negotiable. The AMOUNT CERTIFIED is payable only to the Contractor named herein. Issuance, payment and acceptance of payment are without prejudice to any rights of the Owner or Contractor under this Contract.

AIA DOCUMENT G702 - APPLICATION AND CERTIFICATION FOR PAYMENT - 1992 EDITION - AIA - @1992 THE AMERICAN INSTITUTE OF ARCHITECTS, 1735 NEW YORK AVE., N.W. WASHINGTON, DC 20006-5292

Users may obtain validation of this document by requesting a completed AIA Document D401 - Certification of Document's Authenticity from the Licensee.

CONTINUATION SHEET

AIA DOCUMENT G703

AIA Document G702, APPLICATION AND CERTIFICATION FOR PAYMENT, containing Contractor's signed certification is attached.

In tabulations below, amounts are stated to the nearest dollar.
Use Column I on Contracts where variable retainage for line items may apply.

APPLICATION NO: 4
APPLICATION DATE: 11/14/2022
PERIOD TO: 11/14/2022
ARCHITECT'S PROJECT NO:

A	B	C	D	E	F	G		H	I
ITEM NO.	DESCRIPTION OF WORK	SCHEDULED VALUE	WORK COMPLETED		MATERIALS PRESENTLY STORED (NOT IN D OR E)	TOTAL COMPLETED AND STORED TO DATE (D+E+F)	% (G / C)	BALANCE TO FINISH (C - G)	RETAINAGE (IF VARIABLE RATE)
			FROM PREVIOUS APPLICATION (D + E)	THIS PERIOD					
1	Master Control Panel, Installed	18,000.00	18,000.00	-	-	18,000.00	100%	-	900.00
2	Distribution Panels, Installed	16,200.00	16,200.00	-	-	16,200.00	100%	-	810.00
3	Incidentals, Installed	68,059.00	68,059.00	-	-	68,059.00	100%	-	3,402.95
	GRAND TOTALS	102,259.00	102,259.00	-	-	102,259.00	100%	-	5,112.95

Users may obtain valication of this document by requesting of the license a completed AIA Document D401 - Certification of Document's Authenticity

CLAIM AND INVOICE AFFIDAVIT

State of Oklahoma)
) SS.
County of Grady)

The undersigned (Architect, Contractor, Supplier, Engineer, or Supervisory Official), of lawful age, being first duly sworn on oath says that this (Invoice, Claim, or Contract) is true and correct. Affiant further states that the (Work, Services, or Materials), as shown by this invoice or claim have been (Completed or Supplied) in accordance with the Plans, Specifications, Order, or requests furnished to the affiant. Affiant further states that (s)he has made no Payment, Given, or Donated or Agreed to Pay, Give, or Donate, either directly or indirectly, to any Elected Official, Officer, or Employee of the Owner, any money or any other thing of value to obtain payment or the award of this contract.

Shannon Springs Electrical Expansion (Project Name)

Electrical Technologies, Inc. (Contractor's Company Name)

Joe Hatmacher (Contractor's Signature)

Subscribed and sworn before me this 14th day of November, 2022

Robert M. Brooks (Notary Public)

9-14-2023 (My Commission Expires)

NOTARY PUBLIC State of OK
ROBERT M. BROOKS
Comm. # 15008629
Expires 09-14-2023

NOTE TO THE CONTRACTOR OR SUPPLIER. COMPLETE ONLY THE TOP PORTION OF THIS FORM. PLEASE LEAVE THE BOTTOM PORTION BLANK, THAT PORTION IS FOR APPROVAL BY THE ARCHITECT OR CONSTRUCTION MANAGER.

_____ (Construction Manager)

Subscribed and sworn before me this _____ Day of _____, 20_____

_____ (Notary Public)

_____ (My Commission Expires)

City of
CHICKASHA

Meeting Type: Council Agenda 12-5-2022

Meeting Date: 12/5/2022

Department: Administration **Agenda Item No. 7.a.**

AGENDA ITEM: Discussion, consideration, and possible action to enter into an executive session to discuss confidential communications between the City and City's Attorneys concerning a pending investigation, claim or action which the City with the advice of the City's Attorneys, has determined that disclosure will seriously impair the ability of the City to process the claim or conduct the pending investigation, litigation, or proceeding in the public interest in compliance with its duty of confidentiality under the provisions of 25 O.S. §307B(4). (Email submitted by Torry Wise dated October 22, 2022, regarding the Chickasha Economic Development Council and the economic development incentive program (Downtown Grant Program), including discussion of process going forward on areas of concern and the Chickasha Economic Development Council's position regarding the Oklahoma Open Meeting Act and the Oklahoma Open Record Act in conjunction with the Chickasha Economic Development Council's receipt of Hotel/Motel taxes).

I. BACKGROUND/DESCRIPTION:

II. RECOMMENDED ACTION:
Enter into Executive Session.

III. FISCAL INFORMATION -

IV. FUND INFORMATION:

Dept. Director:	Fund	Account	Amount
	(To)		
	FUND	ACCOUNT	AMOUNT
Meeting Date: December 5, 2022	(From)		

V. ATTACHMENTS:

City of
CHICKASHA

Meeting Type: Council Agenda 12-5-2022

Meeting Date: 12/5/2022

Department: City Clerk **Agenda Item No. 7.b.**

AGENDA ITEM: Discussion, consideration, and possible action to reconvene open session and take appropriate action on any matter discussed in Executive Session.

I. BACKGROUND/DESCRIPTION:

II. RECOMMENDED ACTION:

Reconvene open session and take appropriate action on any matter discussed in Executive Session.

III. FISCAL INFORMATION -

IV. FUND INFORMATION:

Dept. Director:	Fund	Account	Amount
	(To)		
	FUND	ACCOUNT	AMOUNT
Meeting Date: December 5, 2022	(From)		

V. ATTACHMENTS: